This is a digital copy of a book that was preserved for generations on library shelves before it was carefully scanned by Google as part of a project to make the world's books discoverable online.

It has survived long enough for the copyright to expire and the book to enter the public domain. A public domain book is one that was never subject to copyright or whose legal copyright term has expired. Whether a book is in the public domain may vary country to country. Public domain books are our gateways to the past, representing a wealth of history, culture and knowledge that's often difficult to discover.

Marks, notations and other marginalia present in the original volume will appear in this file - a reminder of this book's long journey from the publisher to a library and finally to you.

Usage guidelines

Google is proud to partner with libraries to digitize public domain materials and make them widely accessible. Public domain books belong to the public and we are merely their custodians. Nevertheless, this work is expensive, so in order to keep providing this resource, we have taken steps to prevent abuse by commercial parties, including placing technical restrictions on automated querying.

We also ask that you:

+ *Make non-commercial use of the files* We designed Google Book Search for use by individuals, and we request that you use these files for personal, non-commercial purposes.
+ *Refrain from automated querying* Do not send automated queries of any sort to Google's system: If you are conducting research on machine translation, optical character recognition or other areas where access to a large amount of text is helpful, please contact us. We encourage the use of public domain materials for these purposes and may be able to help.
+ *Maintain attribution* The Google "watermark" you see on each file is essential for informing people about this project and helping them find additional materials through Google Book Search. Please do not remove it.
+ *Keep it legal* Whatever your use, remember that you are responsible for ensuring that what you are doing is legal. Do not assume that just because we believe a book is in the public domain for users in the United States, that the work is also in the public domain for users in other countries. Whether a book is still in copyright varies from country to country, and we can't offer guidance on whether any specific use of any specific book is allowed. Please do not assume that a book's appearance in Google Book Search means it can be used in any manner anywhere in the world. Copyright infringement liability can be quite severe.

About Google Book Search

Google's mission is to organize the world's information and to make it universally accessible and useful. Google Book Search helps readers discover the world's books while helping authors and publishers reach new audiences. You can search through the full text of this book on the web at `http://books.google.com/`

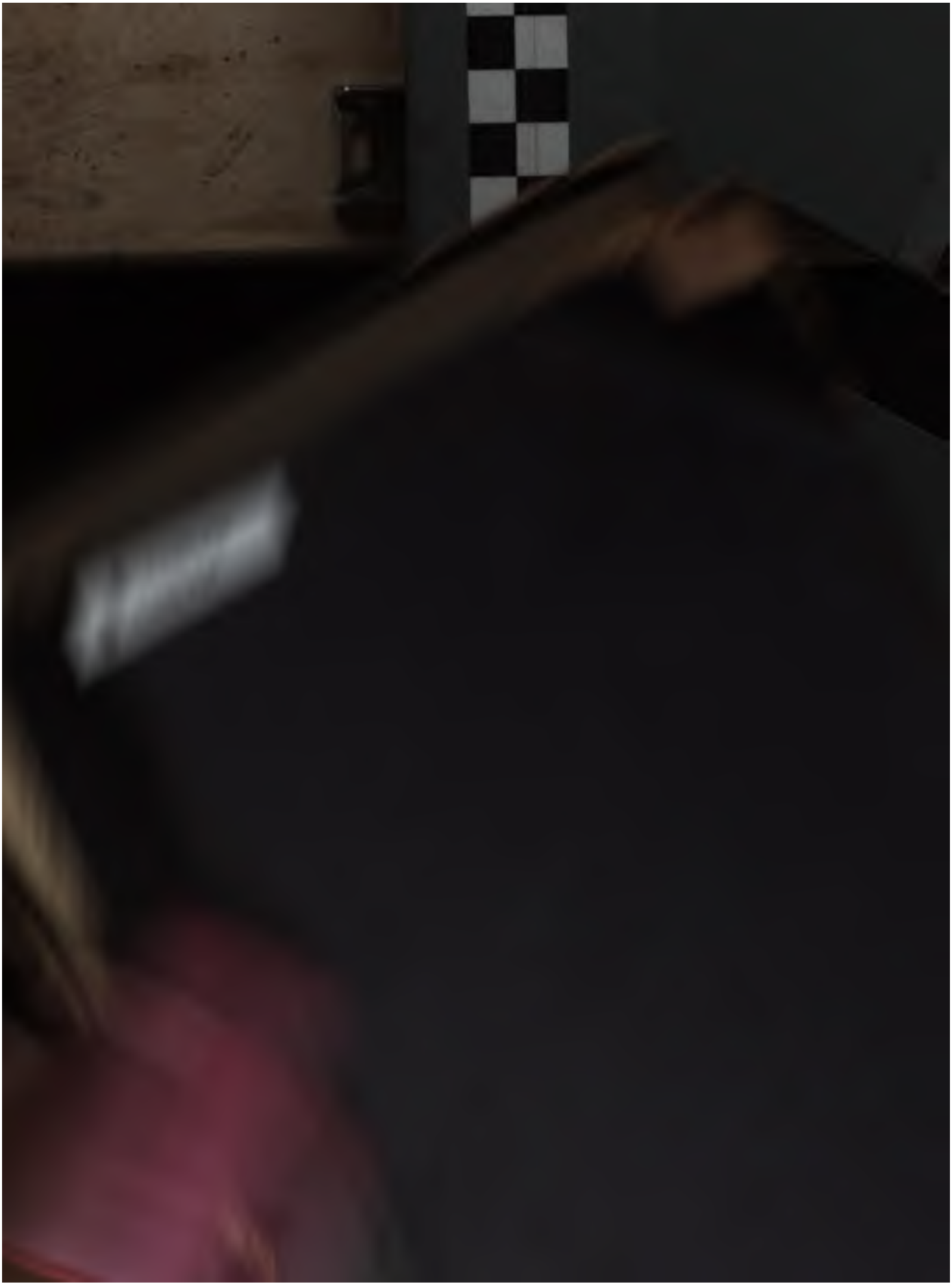

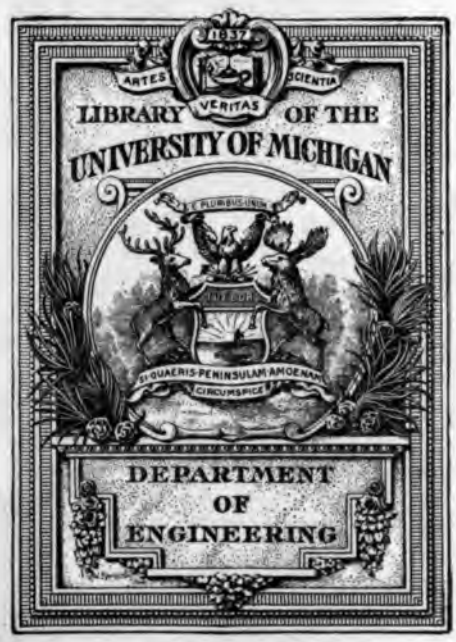
1837
ARTES
VERITAS
SCIENTIA
LIBRARY OF THE
UNIVERSITY OF MICHIGAN
E PLURIBUS UNUM
TUEBOR
SI QUAERIS PENINSULAM AMOENAM
CIRCUMSPICE
DEPARTMENT
OF
ENGINEERING

LIBRA
V
I
.N8

TRANSACTIONS

OF THE

NORTH-EAST COAST INSTITUTION

OF

ENGINEERS AND SHIPBUILDERS.

EDITED BY THE SECRETARY OF THE INSTITUTION.

VOLUME XXI.

TWENTY-FIRST SESSION, 1904-1905.

THE RIGHT OF PUBLICATION AND TRANSLATION IS RESERVED.

NEWCASTLE-UPON-TYNE AND LONDON:
ANDREW REID & COMPANY, LIMITED, PRINTERS AND PUBLISHERS.

1905.

ADVERTISEMENT.

"The Institution merely places on record, and is not, as a body, responsible for the statements or opinions advanced in the Papers read, or the Discussions thereon, which occur at the Meetings during the Session."

CONTENTS OF VOLUME XXI.

TWENTY-FIRST SESSION, 1904-1905.

	PAGE.
Alphabetical List of Names of Writers of Papers and Speakers	vi
,, Officers, 1904-1905	viii
,, Committees, etc., 1904-1905	ix
,, Honorary Members	x
,, Members, July, 1905	x
,, Associates ,, ...	xxxviii
,, Graduates ,, ...	xliii
Proceedings at General Meetings	1, 29, 55, 97, 151, 229, 251, 307
Council Report for Twentieth Session 1903-1904	5
Financial Statement	9
Sessional Award	98
Closing Business of the Session	325
Report of Work of the Consultative Committee appointed to confer with the Marine Department of the Board of Trade	327
MEMOIRS	335
Appendix : - Catalogue of Papers read before the Institution	351

PAPERS READ DURING THE SESSION.

1904.	
Oct. 21st.—PRESIDENTIAL ADDRESS by the Right Hon. Lord Armstrong, M.A., D.C.L.	13
Vote of Thanks to the President	24
Nov. 25th.—"A COMPARISON OF VERTICAL AND HORIZONTAL TUBES IN WATER TUBE BOILERS," by Mr. W. R. Cummins ...	31
Appendix	45
Discussion	47
Discussion resumed...	57
Mr. W. R. Cummins' reply	99
Dec. 19th.—"LAUNCH OF THE U.S.A. CRUISER, "SOUTH DAKOTA," AT THE UNION IRONWORKS, SAN FRANCISCO," by Mr. James Dickie	77
Discussion	91
Discussion resumed	177
Mr. James Dickie's reply	181

17[illegible]

1905.		PAGE.
Jan. 20th.	"PETROL MOTOR CARS," by Mr. Frank Little	109
	Discussion	148
	Discussion resumed...	231
	Mr. Frank Little's reply	309
Feb. 24th.	"APPLICATION OF ELECTRICITY TO INDUSTRIAL PURPOSES," by Mr. J. F. C. Snell	153
	Appendix	168
	Discussion	170
	Discussion resumed...	239
	Mr. J. F. C. Snell's reply	313
Mar. 3rd.	DISCUSSION ON BOARD OF TRADE REGULATIONS FOR CERTIFICATED MARINE ENGINEERS, introduced by Mr. D B. Morison	192
Apr. 14th.	"BOILER FURNACES AND THE EFFECT OF OIL ON THEIR ULTIMATE STRENGTH," by Mr. D. B. Morison	255
	Discussion	273
	Mr. D. B. Morison's reply...	319

LIST OF PLATES.

Plates to Illustrate Papers on—	Plates.
"A Comparison of Vertical and Horizontal Tubes in Water Tube Boilers"... ...	I. to XVIII. and XXXVIII.
"Launch of the U.S.A. Cruiser, 'South Dakota,' at San Francisco"	XIX. to XXXVII.
"Petrol Motor Cars"...	XXXIX. to LV.
"Application of Electricity to Industrial Purposes"...	LVI. to LVIII.
"Boiler Furnaces and the Effect of Oil on their Ultimate Strength"	LIX. to LXXIV.

ERRATUM.

Plate XXVIII.—Sketch showing distribution of crush under fore poppets, *for* scale "$\frac{1}{4}$ in. = 1 ft." *read* "$\frac{1}{8}$ in. = 1 ft."

ALPHABETICAL LIST OF WRITERS OF PAPERS AND SPEAKERS.

Name.	Name of Paper or Subject under Discussion.	Page.
Armstrong, Lord ...	Presidential Address	13
,,	Reply to Vote of Thanks for Address	27
,,	Petrol Motor Cars	150
Bailie, Robert ...	Vertical and Horizontal Tubes in Water Tube Boilers	50
Baker, E. F., R.N. ...	Vertical and Horizontal Tubes in Water Tube Boilers	59
Barker, J. H. ...	Petrol Motor Cars	149
,,	Application of Electricity to Industrial Purposes	243
Berriman, A. E. ...	Petrol Motor Cars	236
Berwick, G. ...	Board of Trade Regulations for Certificated Marine Engineers	214
Borrowman, W. C. ...	Board of Trade Regulations for Certificated Marine Engineers	221
Boyd, W., Ald. ..	Vote of Thanks to President for his Address ..	24
Broadbent, F. ..	Application of Electricity to Industrial Purposes	173
Buchanan, J. H. ...	Board of Trade Regulations for Certificated Marine Engineers	226
,,	The Effect of Oil on Boiler Furnaces	303
Buckland, H. B. ..	Vertical and Horizontal Tubes in Water Tube Boilers	57
,,	The Effect of Oil on Boiler Furnaces	301
Cummin, W. ...	Board of Trade Regulations for Certificated Marine Engineers	211
Cummins, W. R. ...	A Comparison of Vertical and Horizontal Tubes in Water-tube Boilers	31
,,	Reply to the Discussion on Vertical and Horizontal Tubes in Water-tube Boilers	99
Dickie, James ...	Launch of the U.S.A. Cruiser "South Dakota," at San Francisco	77
,,	Reply to the Discussion on the Launch of the U.S.A. Cruiser "South Dakota" ...	181

Name.	Name of Paper or Subject under Discussion.	Page.
Little, Frank ...	Reply to the Discussion on Petrol Motor Cars ...	309
MacColl, Hugo ...	Application of Electricity to Industrial Purposes	245
MacFarlane, G. ...	Board of Trade Regulations for Certificated Marine Engineers	195
Morison, D. B. ...	Board of Trade Regulations for Certificated Marine Engineers	192
,,	Boiler Furnaces and the Effect of Oil on their Ultimate Strength	255
,,	Reply to the Discussion on The Effect of Oil on Boiler Furnaces	319
Mountain, W. C. ...	Application of Electricity to Industrial Purposes	239
Muir, R. H. ...	Launch of the U.S.A. Cruiser "South Dakota"	179
Murray, C. W. ...	Vertical and Horizontal Tubes in Water-tube Boilers	68
Nicolson, G. C. ...	Vertical and Horizontal Tubes in Water-tube Boilers	72
Philipson, W. ...	Petrol Motor Cars	231
Richardson, Sir T. ...	The Effect of Oil on Boiler Furnaces	273
Riseley, H. L. ...	Vertical and Horizontal Tubes in Water-tube Boilers	65
Sharp, A. E.	Vertical and Horizontal Tubes in Water-tube Boilers	74
Shaw, Jas.	Board of Trade Regulations for Certificated Marine Engineers	207
Shaw, Thos.	Launch of the U.S.A. Cruiser "South Dakota"	177
Shute, A. E.	The Effect of Oil on Boiler Furnaces	288
Snell, J. F. C. ...	Application of Electricity to Industrial Purposes	153
,,	Reply to the Discussion on the Application of Electricity	313
Spencer, Thos. ...	Board of Trade Regulations for Certificated Marine Engineers	204
Stewart, Jas. ...	Board of Trade Regulations for Certificated Marine Engineers	203
Taylor, L.	Vertical and Horizontal Tubes in Water-Tube Boilers	63
Thomson, H. ...	Board of Trade Regulations for Certificated Marine Engineers	213
Twaddell, J. L. ...	Launch of the U.S.A. Cruiser "South Dakota"	91
Tweedy, J.	Installation of the President	2
,,	Vote of Thanks to President for his Address ...	26
,,	Board of Trade Regulations for Certificated Marine Engineers	192, 200 207, 216
,,	The Effect of Oil on Boiler Furnaces	279
Unwin, P. I.	Application of Electricity to Industrial Purposes	170
Vardy, G.	Application of Electricity to Industrial Purposes	247
Wallis, R.	Petrol Motor Cars	233
Weighton, R. L. ...	Vertical and Horizontal Tubes in Water-Tube Boilers	52
,,	The Effect of Oil on Boiler Furnaces	293
Westgarth, Tom ...	Board of Trade Regulations for Certificated Marine Engineers	200
,,	The Effect of Oil on Boiler Furnaces	287
Wilson, E.	Board of Trade Regulations for Certificated Marine Engineers	210
Withy, H.	Vote of Thanks to President for his Address ...	25
Woodeson, W. A. ...	Vertical and Horizontal Tubes in Water-Tube Boilers	47

LIST OF OFFICERS.

TWENTY-FIRST SESSION. 1904–1905.

President:

THE RIGHT HONOURABLE LORD ARMSTRONG, M.A., D.C.L., D.L., J.P.

Past-Presidents:

ALDERMAN WILLIAM BOYD, J.P. (1884-1886).

SIR W. THEODORE DOXFORD, M.P., J.P. (1886-88).

F. C. MARSHALL (1888-90), deceased.

WIGHAM RICHARDSON, J.P. (1890-92).

ROBERT THOMPSON, J.P. (1892-1894).

SIR THOMAS RICHARDSON, B.A., J.P. (1894-96).

COL. HENRY F. SWAN, C.B., J.P. (1896-1898).

SIR BENJAMIN C. BROWNE, D.C.L., J.P. (1898-1900).

HENRY WITHY, J.P. (1900-2).

JOHN TWEEDY, J.P. (1902-04).

Vice-Presidents:

G. H. BAINES, J.P.

W. C. BORROWMAN, Wh. Sch.

ERNEST H. CRAGGS.

JOHN DICKINSON, J.P.

C. D. DOXFORD, J.P.

W. H. DUGDALE.

J. R. FOTHERGILL.

J. H. HECK.

SUMMERS HUNTER, J.P.

JAMES MARR.

D. B. MORISON, J.P.

ROBERT HOME MUIR.

JOSEPH M. REYNOLDSON, J.P.

H. B. ROWELL.

G. W. SIVEWRIGHT.

W. G. SPENCE.

T. WESTGARTH.

R. L. WEIGHTON, M.A.

Honorary Treasurer:—G. E. MACARTHY.

Councilmen:

JAMES M. ALLAN.

DAVID ANDREW.

CHARLES A. BUSHELL.

GEORGE CLARK, J.P.

HON. C. A. PARSONS, C.B., M.A., F.R.S.

JOSEPH R. PERRETT.

R. ROBSON, JUN., J.P.

NORTH-EAST COAST INSTITUTION OF ENGINEERS AND SHIPBUILDERS.

COMMITTEES.

TWENTY-FIRST SESSION, 1904–1905.

The President is *ex officio* a Member of all Committees.

Finance Committee:

ALD. WILLIAM BOYD (Chairman).

W. H. DUGDALE.
J. R. FOTHERGILL.
J. M. RENNOLDSON.
H. B. ROWELL.
ROBERT THOMPSON.
GEORGE E. MACARTHY (Hon. Treasurer).

Reading Committee:

J. M. ALLAN.
E. GRIFFITH.
J. H. HECK.
R. ROPNER, JUNR.
J. L. TWADDELL.
HENRY WALKER.

Library Committee:

W. G. SPENCE (Chairman).

W. C. BORROWMAN.
C. A. BUSHELL.
E. GRIFFITH.
R. WALLIS.

Graduates' Award Committee:

J. H. HECK.
E. H. CRAGGS.
W. G. SPENCE.
HENRY WALKER.
R. L. WEIGHTON, M.A.

Educational Committee:

W. C. BORROWMAN.
W. H. DUGDALE.
J. R. FOTHERGILL.
E. GRIFFITH.
G. B. HUNTER.
SUMMERS HUNTER.
JAMES MARR.
D. B. MORISON.
ROBERT THOMPSON.
JOHN TWEEDY.
R. L. WEIGHTON, M.A.
HENRY WITHY.

Measured Mile-Posts' Committee:

C. A. BUSHELL.
W. H. DUGDALE.
JAMES MARR.
W. G. SPENCE.
ROBERT THOMPSON.
JOHN DUCKITT.

Representative on Inst. of Civil Engineers Educational Committee:

R. L. WEIGHTON, M.A.

Representatives on Lloyd's Sub-Committee:

W. H. DUGDALE.
J. W. REED.
JOHN TWEEDY.
HENRY WITHY.

Representatives on the Consultative Committee to the Board of Trade:

W. H. DUGDALE.
J. H. IRWIN.
GEORGE JONES.
D. B. MORISON.

Representative on Council of Armstrong College:

RIGHT HON. LORD ARMSTRONG.

Representatives on the Armstrong College Metallurgical Education Committee:

GEORGE CLARK.
HENRY WITHY.

Representatives on Committees on Standard Sections:

HENRY WITHY. | SUMMERS HUNTER. | ANDREW LAING.

NORTH-EAST COAST INSTITUTION OF ENGINEERS AND SHIPBUILDERS.

List of Members, July, 1905.

EXPLANATION.

(A.)	Agent and Accountant.	(I. & S. M.)	Iron and Steel Merchants and Manufacturers.
(B. B.)	Boiler Builder.	(M.)	Merchant.
(C. E.)	Civil and Consulting Engineer.	(M. S.)	Marine Superintendent.
(E.)	Engineer and Boilermaker.	(N. A.)	Naval Architect.
(E. A.)	Engineering Agent.	(R. M.)	Rope Manufacturer.
(E. E.)	Electrical Engineer.	(S.)	Shipbuilder.
(F. M.)	Forge Master.	(S. O.)	Ship Owner.
(F.)	Iron and Brass Founder.	(SUR.)	Engineer & Ship Surveyor.

HONORARY MEMBERS.

	ELECTED.
Sir W. H. White, K.C.B., LL.D., F.R.S., Cedarcroft, Putney Heath, London, S.W. ... ... (N A)	Nov. 1884
The Right Honourable Lord Linlithgow, G.C.M.G., Hopetoun House, South Queensferry, N.B....	Nov. 1897
The Right Honourable the Earl of Glasgow, G.C.M.G., LL.D., Fairlie Craig, Fairlie, Ayrshire	April 1902
The Right Honourable Lord Armstrong, M.A., D.C.L., D.L., J.P., Cragside, Rothbury	Feb. 1904
Sir Andrew Noble, Bart., K.C.B., F.R.S., Jesmond Dene House ...	Mar. 1904

[redacted]

ELECTED.

Alexander, Francis H., Armstrong College, Barras Bridge, Newcastle-upon-Tyne ... ... (NA) Dec. 1902
Allan, George J., 35, Melrose Avenue, Monkseaton, Northumberland (E) Nov. 1898
Allan, Jas. McNeal, Belle Vue House, Low Fell, Gateshead-on-Tyne (E) Dec. 1886
Allan, John, c/o Messrs. Lloyd's Register of Shipping, 56, John Street, Sunderland ... ... (S) Jan. 1900
Allan, William Jun., c/o Messrs. Richardsons, Westgarth & Co., Scotia Engine Works, Sunderland ... ... (E) Nov. 1899
Allardes, Wm., c/o Messrs. Harland & Wolff, Ltd., Engine Works, Belfast ... ... (E) Nov. 1884
Anderson, Charles William, junr., Mandale House, Thornaby-on-Tees ... ... (S) Nov. 1900
Anderson, Joseph, 5, Westfield Terrace, Wallsend-on-Tyne ... (E) Nov. 1884
Anderson, Thos. James, Cotton Exchange Building, Galveston, Texas, United States of America ... ... (E SUR) Mar. 1898
Andrew, D., 33, Osborne Road, Jesmond, Newcastle-upon-Tyne ...(SUR) Jan. 1885
Andrew, David, jun., c/o Messrs. The Globe Pneumatic Engineering Co., Ltd., 116, Hope Street, Glasgow (E) { Graduate, Jan. 1898 / Member, Dec. 1903
Andrews, Jas., Rinnoul, Myrtle Avenue, Lenzie, nr. Glasgow ... (E) Nov. 1884
Angus, John Chas., County Hotel, Hebburn-on-Tyne ... ... (E) Nov. 1899
Angus, W. J., Messrs. Vickers, Sons & Maxim, Naval Construction Works, Barrow-in-Furness ... ... (E) Oct. 1892
Armstrong, Adam Latimer, 42, Percy Park, Tynemouth ... ... (S) April 1901
Armstrong, Joseph, 50, High Southwick, Sunderland ... ... (S) Nov. 1892
Armstrong, R. B., Farne House, Stannington Avenue, Heaton, Newcastle-upon-Tyne ... ... (E) Oct. 1887
Armstrong, Walter, 14, Elwin Terrace, Sunderland... ... ... (S) May 1899
Ascroft, Frederick W., 11 Park Street, Lytham ... . (E) May 1900
Atherton, William Henry, M.Sc., The Plantation, 101, Whitaker Road, Derby ... ... (E) Oct. 1891
Atkinson, Alfred, c/o Messrs. Clark, Chapman & Co., Victoria Works, Gateshead-on-Tyne ... ... (E) May 1901
Atkinson, George H., 3, Acclom Street, Hartlepool ... ... (E) Nov. 1898
Atkinson, John Joseph, 7, Swiss Road, Elm Park, Fairfield, Liverpool ... ... (E) Mar. 1891
Avery, Thomas, R.I.M. Dockyard, Kidderpore, Calcutta ... ... (NA) Nov. 1903

B.

Baber, Samuel Ernest, "Springdale," Charlton Road, Keynshaw, Bristol ... ... (E) Nov. 1901
Baggallay, Robert, Messrs. Flannery, Baggallay & Johnson, 9, Fenchurch Street, London, E.C. ... ...(C E) May 1902
Bagnall, T. W., The Groves, Winlaton ... ...(F M) Nov. 1893
Bailey, Charles H., Tyne Engine Works, Newport, Mon. ... ... (E) Mar. 1896
Bailey, James, 3, South Avenue, Ryton-on-Tyne ... ... (E) Nov. 1884
Bailey, James T., c/o Messrs. Swan Hunter & Wigham Richardson, Ltd. Neptune Works, Low Walker ... ... (E) Feb. 1899
Baines, Geo. Henry, c/o Messrs. W. Gray & Co., Central Marine Engine Works, West Hartlepool ... ... (E) Oct. 1888
Baird, Alexander, 23, Roxburgh Terrace, Whitley Bay ... ... (E) Oct. 1898
Baird, George, 24, Cecil Street, North Shields ... ... (E) Oct. 1892
Baird, Robert, Northumberland Square, North Shields .. ... (E) Jan. 1890

ELECTED.

Baker, E. F., Eng.-Lieut., R.N., Messrs. The Greenock Foundry Co., Greenock ... ... (E) { Graduate, Nov. 1892; Member, Feb. 1898

Barber, Wm. Daglish, 120, Tosson Terrace, Heaton, Newcastle-upon-Tyne ... ... (S) Oct. 1902

Barker, John H., 2, Collingwood Street, Newcastle-on-Tyne (C E) Nov. 1904

Barley, C. J., Point House, Blackheath, Greenwich, London, S.E. ... ... (E) { Graduate, Feb. 1885; Member, Dec. 1886

Barr, Robert Houston, 46, Kelly Street, Greenock, N.B. (E) { Graduate, Nov. 1901; Member, Dec. 1903

Barrett, A., Highfield, Hutton Avenue, West Hartlepool ... (E) May 1896

Barron, T. G., Hobourne, Elswick Road, West Hartlepool ... (E) Oct. 1888

Bateman, John, South Vane Terrace, Darlington ... ... (E) Mar. 1901

Batey, John Thomas, 52, Queen's Road, Jesmond, Newcastle-upon-Tyne ... ... (S) Nov. 1885

Batliboi, Jehangir Framji, 45, Forbes Street, Fort, Bombay ... (E) Dec. 1888

Baxter, J., 26, Simonside Terrace, Heaton, Newcastle-upon-Tyne (E) Nov. 1884

Beckett, W. H., Eng.-Lieut., R.N., Controllers Department, The Admiralty, Whitehall, London, S.W. ... . (E) Dec. 1903

Bell, Geo. Arthur, 48, Crown Street, Newcastle-upon-Tyne (E) { Graduate, Oct. 1890; Member, Jan. 1894

Bell, James W., Tyne Dock Gas Works, South Shields ... ... (E) Feb. 1905

Bell, Joshua Robson, 40, Hill Street, Jarrow-on-Tyne ... ... (S) Mar. 1899

Bell, William, Messrs. Cleland's Graving Dock and Slipway Co., Willington Quay-on-Tyne ... ... (E) Nov. 1888

Bennett, Percy M., c/o Messrs. Callender's Construction Co., Ltd., Hamilton House, Victoria Embankment, London, E.C. ... (E E) Dec. 1899

Berkley, A. B., 8, Camden Terrace, Clifton Vale, Bristol ... ... (E) Mar. 1887

Bertram, N. Stewart ... ... (E) { Graduate, Feb. 1901; Member, Oct. 1902

Berven, Ferdinandt, c/o Messrs. Swan, Hunter & Wigham Richardson, Ltd., Newcastle-on-Tyne ... . (S) April 1901

Bigge, D. L. Selby, 27, Mosley Street, Newcastle-upon-Tyne ... (E E) Nov. 1894

Billetop, Torben Christian, Springfield, Lesbury Road, Heaton, Newcastle-upon-Tyne ... ... (E) Nov. 1896

Bindesböll, S. C. W., Aktieselskabet Helsingors Jernskibs- og

ELECTED.

Blow, Charles, Beech Grove, Benton, Newcastle-upon-Tyne ... (E) Nov. 1898
Blumer, Wm., Ashbrooke Tower, Sunderland ... ... (S) Dec. 1886
Böcler, Harry, 19, Azalea Terrace South, Sunderland (S) { Graduate, Mar. 1898; Member, Dec. 1901 }
Bodin, Laurits M., 58, John Street, Sunderland ... ... (E & SUR) Dec. 1889
Bone, W. J., 61, Linskill Terrace, North Shields ... ... (S) Dec. 1884
Bonnyman, James Smith, 64, Plasturton Avenue, Cardiff... ... (E) Nov. 1889
Booth, Edward Spence, Box 5124, Boston, U.S. America ...(M S & N A) Oct. 1889
Borrie, Peter, 55, Bonlea Terrace, Thornaby-on-Tees ... ... (E) Nov. 1900
Borrowman, William Cameron, Wh.Sch., Strathmore, West Hartlepool ... ... (E) Oct. 1898
Bosi, Guiseppe, No. 19-3, Via Caffaro, Genoa, Italy ... (E & NA) Jan. 1894
Bowerbank, Albert W., 52, Victoria Avenue, Whitley Bay, Northumberland ... ... (E) { Graduate, Nov. 1900; Member, Dec. 1902 }
Boyd, Arthur, 8, Rectory Terrace, Sunderland ... ... (E SUR) May 1895
Boyd, Wm., Prestwick Lodge, Ponteland, nr. Newcastle-upon-Tyne (E) Nov. 1884
Boyd, William, 25, Woodbine Avenue, Gosforth, Newcastle-upon-Tyne ... ... (E) Nov. 1904
Boyt, John T., 387, Bourse Buildings, Philadelphia, Pa., U.S.A. ... (E) Nov. 1893
Bramwell, Balfour, 4, Victoria Crescent, Ravenhill Road, Belfast ... ... (E) { Graduate, Nov. 1886; Member, Nov. 1887 }
Brankston, R. T., Beechcroft, Beechgrove Road, Newcastle-upon-Tyne ... ... (E) Nov. 1884
Brigham, Robert F., 5, Argyle Terrace, South Shields ... ... (E) Mar. 1897
Broadbent, Frank, 4, Queen Street Place, London, E.C. ... ... (E E) Nov. 1893
Brock, Henry W., c/o Messrs. Wm. Denny & Bros., Dumbarton (E & S) Nov. 1899
Brockett, Charles, 35, Milton Road, West Hartlepool ... ... (E) Feb. 1899
Brookfield, J. W., Brookhurst, Halifax, Nova Scotia ... ... (N A) Nov. 1903
Brotherston, James, 23, Nelson Street, Sunderland ... ... (E) Oct. 1895
Brown, E. Eugene, c/o Messrs. J. H. Holmes & Co., Portland Road, Newcastle-upon-Tyne ... ... (E E) Feb. 1886
Brown, Geo. Matthew, c/o Messrs. The British Thompson-Houston Co., Rugby ... ... (E) { Graduate, April 1895; Member, Nov. 1897 }
Brown, James, c/o Messrs. Scott & Co., Greenock ... ... (E) Mar. 1891
Brown Joseph, 26, Fern Avenue, Jesmond, Newcastle-upon-Tyne (E) May 1904
Brown, Percy J., Salem Cottage, Sunderland ... ... (E) May 1899
Brown, Robson, 32, Salmon Street, South Shields ... ... (E) Nov. 1889
Brown, T. R., 37, Stansfield Street, Sunderland ... (E) { Graduate, May 1885; Member, Oct. 1886 }
Brown, William, c/o Messrs. Siemens Brothers & Co., Woolwich... (E) April 1887
Browne, Benjamin C., jun., 8, Lambton Road, Newcastle-upon-Tyne ... ... (E) { Graduate, Oct. 1898; Member, Dec. 1901 }
Browne, Sir B. C., Westacres, Benwell, Newcastle-upon-Tyne (C E) Jan. 1885
Bryers, Charles, 10, The Avenue, Sunderland ... ... (E) Nov. 1902
Buchanan, John H., Oswald Chambers, 5, Oswald Street, Glasgow(SUR) Oct. 1888
Buckland, H. B., Baltic Chambers, Quayside, Newcastle-upon-Tyne (E) Nov. 1885
Buckwell, George William, Board of Trade Surveyor's Offices, Barrow-in-Furness ... ...(SUR) Oct. 1896
Bull, John Catharinus, Athelstane, Helensburgh ... ... (E) Oct. 1892
Bulmer, A. E., Spring Garden Engineering Works, Pitt St., Newcastle-upon-Tyne ... ... (E) { Graduate, Nov. 1895; Member, Nov. 1901 }
Bulmer, Frederick Charles, 29, Benwell Grove, Benwell, Newcastle-upon-Tyne ... ... (E) { Graduate, May 1894; Member, Oct. 1895 }

		ELECTED
Bulmer, John George, 34, Brighton Grove, Newcastle-upon-Tyne	(E)	May 1894
Bulmer, Septimus, 49, Brighton Grove, Newcastle-upon-Tyne...	(E)	Graduate, May 1894 Member, Dec. 1899
Burgess, Norval Henry	(S)	Graduate, Dec. 1901 Member, Dec. 1902
Burley, M. F., 14, Croft Terrace, Jarrow-on-Tyne	(F)	Nov. 1899
Burnett, Norman, B, Milburn House, Newcastle-upon-Tyne ...	(E)	Oct. 1891
Bushell, Chas. A., 1, Benton Terrace, Newcastle-upon-Tyne	(N A & SUR)	Nov. 1893
Butterfield, George, 4, Kayll Road, Sunderland	(S)	Nov. 1884
Butterworth, George Herbert, The Stanfield, 134, Liverpool Road, Great Crosby, nr. Liverpool	(E)	Nov. 1899

C.

Cadle, Thos. O. M., 11, Saville Row, Newcastle-upon-Tyne ...	(E)	Nov. 1904
Cairns, C. W., M.Sc., c/o Mrs. Robson, 11, Beaumont Terrace, Gosforth, Newcastle-upon-Tyne	(E)	Graduate, Nov. 1894 Member, Dec. 1897
Carr, Ralph, jun., Thornleigh, Clayton Road, Newcastle-upon-Tyne	(E)	Graduate, Jan. 1894 Member, Nov. 1901
Carr, Wilson Story, 14, Percy Gardens, Tynemouth	(C E)	May 1900
Cama, Nusserwanji Bomanji, Sleater Road, Tardeo, Bombay, British India	(E)	Dec. 1888
Cameron, Angus, 27, Rosslyn Terrace, Sunderland	(S)	Nov. 1892
Cameron, Hugh Robert, Tweed House, York Terrace, North Shields	(E)	Feb. 1903
Campbell, Thomas, c/o Messrs. Morday & Curney, Windsor Slipway, Cardiff	(S)	Mar. 1894
Carney, J. H., Glengariffe, Stow Park, Newport, Monmouth ...	(E)	Mar. 1897
Carney. W. H., "Oakdene," Stow Hill, Newport, Monmouthshire	(S)	Oct. 1902
Carstons, Samuel, Messrs. Burmeister & Wains, Maskin-og Skibsbyggeri, Copenhagen, Denmark...	(S)	Dec. 1887
Carter, Geo. J., c/o Messrs. Sir W. G. Armstrong, Whitworth & Co., Elswick Shipyard, Newcastle-upon-Tyne	(N A)	Dec. 1897
Ceuvel, John L., 763, Gulgenstug, Naarden, Holland	(E)	Mar. 1886
Champness, E. Coulter, Lloyd's Register of Shipping, Collingwood		

ELECTED.

Clark, Henry, Southwick Engine Works, Sunderland ... ... (E) Oct. 1887
Clark, John Harwood, Messrs. Sir James Laing & Sons, Deptford Yard, Sunderland ... ... (E) Nov. 1901
Clarke, Harry, Lloyd's Register of Shipping, Bank Chambers, Newport, Monmouth ... ... (E) Mar. 1897
Clarke, Henry Trevisa, Deptford Shipyard, Deptford, Sunderland (S) Mar. 1892
Clarke, William Henry, 21, The Terrace, Roker, Sunderland ... (E) Dec. 1896
Cleghorn, Alexander, 10, Whittinghame Drive, Kelvinside, Glasgow ... ... (E) Feb. 1897
Clephane, Alex., 10, Chancelot Terrace, Ferry Road, Edinburgh (M S) Jan. 1905
Cohn, William M., 2, Marine Terrace, North Shields ... ... (S) Nov. 1893
Coleman, A. Chas., 3, Balmoral Terrace, Gosforth, Newcastle-upon-Tyne ... ... (E E) Nov. 1903
Collins, Edward D., 5, Albert Terrace, Whitley Bay, Northumberland ... ... (E) Feb. 1903
Common, John B. A., Lloyd's Register of Shipping, 71, Fenchurch Street, London, E.C. ... ... (E) April 1896
Coninck, Gaston de, Bay Bank, Hampton, Va., U.S.A. ... . .
Conràdi, Carl, Prinsens Gade 2b, Christiania, Norway ... ... (E) Nov. 1884
Cookson, John A., 2, St. Edmund's Road, Gateshead-on-Tyne ... ... (E) { Graduate, Dec. 1895 / Member, Nov. 1897
Cookson, William D., Milton House, Albert Drive, Low Fell, Gateshead-on-Tyne ... ... (E) Nov. 1901
Cooper, Burjorjee S. N., Sea View, Mahim, Bombay, British India (E) May 1900
Cooper, Shapoojee P., c/o Messrs. The Lakhshmi Cotton Manufacturing Co., Ld., Luxmi Mills, Sholapur, British India ... (E) Apl. 1903
Coote, Arthur, Messrs. R. & W. Hawthorn, Leslie, & Co., Hebburn-on-Tyne ... ... (S) Nov. 1884
Cornish, H. P., Lloyd's Register of Shipping, 28, Kattendyk, Ouest Quai, Antwerp ... ... E) Oct. 1888
Couche, Henry Drew, 36, Alfred Road, Birkenhead ... ... (S) Oct. 1891
Coull, Alex. B., Baltic Chambers, Newcastle-upon-Tyne ... ... (C E) Jan. 1898
Cowan R., 14, Osborne Avenue, South Shields ... ... (E) Dec. 1896
Craggs, Ernest H., Messrs. R. Craggs & Sons, Tees Dockyard, Middlesbrough ... ... (S) Oct. 1888
Craig, Robert, Pageland House, Grange Road, West Hartlepool ... (E) Nov. 1892
Crammond, A., Tyne Dock Entrance, Corstorphine Town, South Shields ... ... (E) Nov. 1903
Crighton, A. T., 27, Canal des Brasseurs, Antwerp ... ... (E) Apl. 1903
Crookston, John, 72, Mark Lane, London, S.E. ... ... (E) Mar. 1896
Crouch, Herbert, c/o Messrs. The Thames Ironworks and S. B. Co., Tidal Basin, London, E. ... ... (S) May 1905
Crozier, Thomas W., c/o Messrs. Blyth Shipbuilding Co.. Blyth ... (S) Dec. 1902
Cruddas, W. D., Messrs. Sir W. G. Armstrong, Whitworth & Co., Ltd., Elswick, Newcastle-upon-Tyne ... ... (E) Dec. 1884
Cruickshank, Alexander, H.M. Naval Dockyard, Hongkong, China (SUR) Mar. 1892
Cullen, Harold Rigby, M.A., Durham College of Science, Newcastle-upon-Tyne ... ... (E) Nov. 1902
Cummin, William, c/o Mr. Hyslop, Hampton House, Grey Street, St. Kilda, Melbourne, Australia ... ... (E) Mar. 1896
Cumming, William Milligan, Pape's Buildings, Pink Lane, Newcastle-upon-Tyne ... ... (E) Dec. 1903

ELECTED.

Cummins, W. R., Ivanhoe, 15, Western Elms Avenue, Reading, Berkshire ... ... (E) Nov. 1884

Curgenven, L. W., Eng.-Lieut., R.N., c/o The Admiralty, White-Hall, London, S.W. ... ... (E) Nov. 1903

Currie, H. B., 48, Jesmond Road, Newcastle-upon-Tyne (C E) { Graduate, Nov. 1897 / Member, Oct. 1904

D.

Dalrymple, Alexander, 25, Rutland Avenue, Sefton Park, Liverpool (E) Nov. 1901

Dalrymple, Wm., Myrtle Cottage, nr. Cleadon, Sunderland ... (E) Dec. 1886

Dalrymple, William, Jun., 9, Park Place West, Sunderland ... (E) Dec. 1895

Danielsen, John William, Highfield, Farquhar Road, Birmingham... ... ... (E) { Graduate, Mar. 1899 / Member, Mar. 1902

Darling, W. J., Lloyd's Register of Shipping, Dock Chambers, Barry ... ... (S) April 1887

Darney, John, c/o Messrs. Short Bros., Pallion, Sunderland ... (S) Nov. 1884

Davidson, Alexander, c/o Deubler, 11, Nelson Street, Greenock ... (E) Nov. 1900

Deighton, William, Messrs. Deighton's Patent Flue Co., Vulcan Works, Pepper Road, Leeds ... ... (E) Nov. 1897

Denny, Archibald, c/o Messrs. Wm. Denny & Bros., Dumbarton ... (S) Dec. 1891

Denny, Leslie, c/o Messrs. Wm. Denny & Bros., Dumbarton ... (S) Nov. 1899

Denny, Peter, Bellfield, Dumbarton... ... ... (E & S) Nov. 1899

Denton, Geoffrey Price, 63, Osborne Road, Newcastle-upon-Tyne (S) April 1905

De Rusett, Edwin W., Warden House, Percy Park Road, Tynemouth ... ... (S) Nov. 1890

Detchon, John, Bamborough Terrace, North Shields ... ... (E) Feb. 1899

Dewar, John, The Green, Wallsend-on-Tyne ... ... (E) { Graduate, Nov. 1899 / Member, Mar. 1904

Dick, F. W., c/o Messrs. Park Gate Iron and Steel Co., Ltd., Park Gate, Rotherham ... ... (I & S M) Oct. 1891

Dickie, James, Falstone House, West Park, South Shields ... (S) Nov. 1901

Dickie, James, Rooms 13 and 14, 315, California Street, San Francisco, California, U.S.A. ... ... (S) Mar. 1894

Dickie, John P., Falstone House, West Park, South Shields ... ... (E) { Graduate, Mar. 1898 / Member, May 1900

[redacted]

ELECTED.

Dixon, William John, Eng.-Lieut., R.N., 10, Granville Road, Newcastle-upon-Tyne... ... ... (E) { Graduate, Mar. 1896; Member, Nov. 1899

Dobson, Henry James, c/o Messrs. William Dobson & Co., Newcastle-upon-Tyne ... ... (S) { Graduate, Oct. 1891; Member, Feb. 1898

Dobson, Wm. G., The Chesters, Jesmond, Newcastle-upon-Tyne ... ... (S) { Graduate, Feb. 1896; Member, Dec. 1901

Dobson, William, Shipbuilder, Walker-on-Tyne ... ... (S) Nov. 1888

Donald, James, 58, General Gordon Terrace, Sunderland ... ... (S) Nov. 1884

Donaldson, Henry B., c/o Messrs. Earles & Co., Ltd., Shipbuilders, Hull ... ... (S) { Graduate, Nov. 1897; Member, Dec. 1902

Donkin, George, St. Andrew's Engine Works, Walker Gate, Newcastle-upon-Tyne ... ... (E) Oct. 1892

Donovan, J. W., 2, Park Place, West, Sunderland ... ... (E) April 1885

Douglas, John F., c/o Messrs. Day Summers & Co., Northam Ironworks, Southampton ... ... (E) Jan. 1888

Dove, Herbert J., 14, Lyndhurst Avenue, Jesmond, Newcastle-upon-Tyne ... ... (E) Nov. 1896

Downing, Nicholas, Glenbrooke, Victoria Avenue, Norton Road, Stockton-on-Tees ... ... (I F) Oct. 1894

Dowsen, Chas., 21, Croft Terrace, Jarrow-on-Tyne... ... ... (E) Dec. 1885

Dowsen, Charles, jun., 21, Croft Street, Jarrow-on-Tyne (S) { Graduate, Feb. 1901; Member, Oct. 1904

Dowsen, Jas. Wm., 21, Croft Terrace, Jarrow-on-Tyne ... ... (E) May 1903

Doxford, Albert Ernest, M.A., 1, Grange Crescent, Sunderland... ... ... (E) { Graduate, Oct. 1890; Member, Nov. 1893

Doxford, Charles D., Pallion Shipyard, Sunderland ... ... (S) Nov. 1884

Doxford, Robt., jun., Silksworth Hall, Sunderland (S) { Graduate, Feb. 1897; Member, Dec. 1901

Doxford, Robert P., Pallion Engine Works, Sunderland ... ... (E) Nov. 1884

Doxford, Sir W. Theodore, M.P., Pallion Shipyard, Sunderland ... (S) Nov. 1884

Dressler, Gustav, c/o Messrs. Blohm & Voss, Shipbuilders, Hamburg (E) Jan. 1900

Duckitt, Jno., Leazes Gate Villa, Newcastle-upon-Tyne ... ... (E) Nov. 1884

Duckitt, John Brentnall, 179, Great Norbury Street, Hyde, Cheshire ... ... (E E) { Graduate, Oct. 1888; Member, April 1895

Duckitt, Talbot, Hawthorndale Cottage, Paton Street, Alloa, N.B. ... ... (E E) { Graduate, Oct. 1891; Member, Oct. 1898

Dugdale, William H., Wear Dock Yard, Sunderland ... ... (S) Mar. 1894

Duguid, Robert, c/o Messrs. Thomas Wilson & Sons, Naval Architects' Department, Hull ... ... (S) Oct. 1892

Dunlop, John, c/o Messrs. John Reid & Co., Baltic Chambers, 50, Wellington Street, Glasgow ... ... (S) Mar. 1898

Dykes, John, Lloyd's Register of Shipping, 3, Oriental Place, Southampton ... ...(SUR) Oct. 1889

E.

Eason, Thos., 30, Rothwell Road, Gosforth, Newcastle-upon-Tyne (E) April 1899

Easthope, James, Messrs. Lloyds Register of Shipping, Ramsden Square, Barrow-in-Furness ... ... (SUR) Dec. 1903

Edmiston, A. R., Ivy Cottage, Highfield Road, Walton, Liverpool ... ... (E) { Graduate, Jan. 1898; Member, Oct. 1904

Edmiston, Jas. B., Ivy Cottage, Highfield Road, Walton, Liverpool (E) Nov. 1886

ELECTED.

Edwards. Robert Wm., Eng. Captain, R.N., H.M.S. "Wildfire," Sheerness ... ... (R N E) Feb. 1902

Elder, Edward, c/o Messrs. Frew, Elder, & Co., 9 Queen Street, Newcastle-upon-Tyne ... ... (S) { Graduate, Nov. 1890 / Member, Oct. 1892

Elliott, Andrew, 27, Church Road, Seaforth, near Liverpool ... (E) May 1903

Elliott, Richard G., 132, Chillingham Road, Heaton, Newcastle-upon-Tyne ... ... (S) May 1905

Elliott, William D., Hessle, Hull ... ... (E) Nov. 1894

Eltringham, Harry, Messrs. J. T. Eltringham & Co., Stone Quay, South Shields ... ... (S) Feb. 1901

Eshelby, William, 13, Brankingham Terrace, Norton Road, Stockton-on-Tees ... ... (E) Feb. 1888

Eyres, Reginald J., 4, Cedars Crescent, Sunderland ... (C E) Feb. 1900

F.

Fairbairn, Archbold, F Violet Street, South Hylton, Sunderland (E) Mar. 1902

Fairburn, William Armstrong, P.O. Box, 183, Quinay, Mass., U.S.A. (*Life Member*) ... ... (N A) (E) Nov. 1902

Fairweather, C. W., Stotes Hall, Jesmond Dene Road, Newcastle-upon-Tyne ... ... (E) Oct. 1902

Farina, A. J., 63, Quayside, Newcastle-upon-Tyne ... ... (E) Nov. 1884

Farquharson, Geo. James, c/o Messrs. Elder, Dempster & Co., Luisenhof, Neue Gröninger Strass, 1, Hamburg ... ... (E) April 1899

Fenwick, James, B.Sc., C.E., 19, Bridge Street, Sydney, New South Wales ... ... (E) Oct. 1892

Ferguson, Wm. Deeble, 3, Mount Delphi, Antrim Road, Belfast ... (CE) Feb. 1901

Ferrier, Robert M., M.Sc., University College, Bristol ... ... (E) Nov. 1892

Ferry, S. O., 10, Malvern St., Newcastle-upon-Tyne ... ... (E) Oct. 1902

Fettes, James, c/o Messrs. R. A. Mudie & Sons, Maritime Buildings, East, Dock Street, Dundee ... ... (E) May 1899

Field, Arthur M. C., 44, Cambridge Road, Thornaby-on-Tees ... (E E) Jan. 1898

Figari, Emanuel D., c/o Messrs. Odero & Co., Shipbuilding Yard, Foce, Genoa, Italy ... ... (S) Dec. 1900

Findlay, John Taylor, 6, Earls Dene, Low Fell, Gateshead (S SUR) Mar. 1902

Fish, Thomas Wilson, Lloyd's Register of Shipping, 2 Hare Street

ELECTED.

Foster, Martin, Claremont, Norton, Stockton-on-Tees ... ... (F M) Nov. 1900
Fothergill, J. R., 1, Bathgate Terrace, West Hartlepool ... ... (C E) Mar. 1886
Fowler, Jas. Speir, 27, Whitlets Road, Ayr, N.B. ... ... (E) Nov. 1901
Fox, Carter, 32, Lish Avenue, Whitley Bay... ... (E) { Graduate, Feb. 1898; Member, Dec. 1899 }
Fox, William, 56, Talbot Road, Old Trafford, Manchester ... (E) April 1895
France, Alfred Brown, Extension Hotel, Middlesbrough ... ... (E) Feb. 1900
Franki, J. P., c/o Messrs. Morts Dry Dock and Engineering Co., Sydney, N.S.W., Australia ... ... (E) Jan. 1886
Fraser, John Holt, c/o Messrs. A. & R. Brown & Co., 90, Regent Road, Liverpool ... ... (E) { Graduate, Oct. 1895; Member, Jan. 1898 }
Friederichs, Herbert F., West Hartlepool Electricity Works, Burn Road, West Hartlepool ... ... (E E) Mar. 1901
Fuller, Philip S., 229, Cardigan Terrace, Gateshead-on-Tyne ... (E) Nov. 1899
Furness, Stephen Wilson, Messrs. Furness, Withy & Co., West Hartlepool ... ... (S) May 1904

G.

Gaine, Roger L., Hartlepool Engine Works, Hartlepool (E) { Graduate, Dec. 1887; Member, Oct. 1894 }
Gannaway, H. G., 7, Oxford Terrace, Renfrew, N.B. ... ... (S) Nov 1884
Garelli, Fabio ... ... (S) Oct. 1896
Garmey, John, Prince Line, Ltd., Produce Exchange, New York... (E) Dec. 1898
Garson, Stanley T., 5, Rome Terrace, Borough Road, Middlesbrough ... ... (I M) Nov. 1902
Garthwaite, John R., c/o Messrs. R. Ropner & Sons, Stockton-on-Tees (S) May 1889
Garwood, Harry Tom, Eng. Lieut. R.N., 50, Park Avenue, Whitley Bay, Northumberland ... ... (R N E) May 1903
Gayner, Robt. H., Jun., West Bank, Sunderland ... (E) { Graduate, Mar. 1886; Member, Oct. 1888 }
Gearing, Ernest George, Roschurst, Grosvenor Road, Headingley (E) Dec. 1892
Geddes, Christopher, 2A, Drury Lane, Water Street, Liverpool ... (E) Oct. 1888
Giacomuzzi, Virgilio, c/o Messrs. Nicolo Odero fu Alessandro, Sestri-Ponenti, Italy ... ... (N A) Nov. 1899
Gibson, H., 162, Roker Avenue, Monkwearmouth, Sunderland ... (S) Nov. 1884
Gibson, J. Hamilton, c/o Messrs. Cammel, Laird & Co., Birkenhead Iron Works, Birkenhead ... ...(E) { Graduate, April 1891; Member, Oct. 1894 }
Glahome, J. W., 31, North Parade, Whitley Bay, Northumberland ... ... (E) { Graduate, Jan. 1899; Member, April 1904 }
Golledge, William, c/o Messrs. Aublet, Harry & Co., 53, Curtain Road, London, E.C. ... ... (E E) { Graduate, Nov. 1891; Member, Nov. 1896 }
Good, Farrant, 19, Plasturton Avenue, Cardiff ... ... (E) Mar. 1896
Gordon, William James, c/o Messrs. Vickers, Sons & Maxim, Naval Construction Works, Barrow-in-Furness ... ... (E) Oct. 1887
Gordon, William Leslie, Invermark, Broughty Ferry, N.B. ... (E) April 1893
Graham, James Thos., 126, Westmorland Road, Newcastle-upon-Tyne ... ... (E) Nov. 1897
Graham, Joseph S., Morro House, Syon Street, Tynemouth ... (S) Feb. 1903
Graham, William, West House, Tynemouth ... ... (S) Oct. 1891

		ELECTED
Graham, William, 30, Hill Street, Jarrow-on-Tyne...	(S)	April 1893
Graham, William, Rockcliffe, Redbrink Crescent, Barry Island, South Wales	(E)	Nov. 1894
Gravell, John, Bureau Veritas Register of Shipping, 155, Fenchurch Street, London, E.C.	(N A SUR)	Nov. 1884
Gray, Robert, 24, Alexandra Place, Jesmond, Newcastle-upon-Tyne	(E)	Nov. 1903
Green, W. G., Churchill Street, Willington Quay-on-Tyne ...	(E)	Nov. 1884
Griffith, Edwin, 40, Osborne Road, Jesmond, Newcastle-upon-Tyne	(E)	Nov. 1897
Grimes, Thomas Benjamin, 39, Vespasian Avenue, South Shields...	(E)	Mar. 1890
Gulston, A., Clayton Park Lodge, Jesmond, Newcastle-upon-Tyne	(E)	Dec. 1888
Gunn, Sir John, Chairman, Messrs. Mount Stuart Dry Docks Co., Cardiff (*Life Member*)		June 1896
Gunter, John Henry	(I & S M)	Oct. 1902
Guyate, E. G., Eng.-Com., R.N., H.M.S. "Spartiate," Chatham ...	(E)	Nov. 1903

H.

Hall-Brown, Ebenezer, St. Helens Engine Works, Govan, Glasgow	(E)	May 1902
Hall, Edward, 68, Grange Road West, Jarrow-on-Tyne	(S)	Nov. 1885
Hall, F. M., 8, Wentworth Terrace, South Shields	(CE)	Nov. 1903
Hall, John, 28, Malvern Street, Newcastle-upon-Tyne	(E)	May 1900
Hall, Thomas, The Hall Engineering Works, 14, Cote Street, Montreal, Canada	(E)	Nov. 1899
Hamilton, Andrew, 19, James Street, Liverpool	(CE)	April 1901
Hamilton, James, Beech House, Mile End, Stockport	(E)	Graduate, Nov. 1897 Member, Dec. 1901
Hammar, Hugo G., Lindholmens, Verkstads Alstieholag, Göteberg, Sweden	(S)	Nov. 1890
Hammersley, B. J.	(E)	May 1901
Hammond, Fleetwood C., c/o Messrs. Cowpen Coal Co., Ltd., Cowpen Colliery, Blyth	(E)	Graduate, Nov. 1899 Member, Dec. 1901
Haramüshi, M., Jun., Mitsubishi Dockyard and Engine Works, Nagasaki, Japan	(N A)	Nov. 1897
Harbottle, Thomas, 5, Alexandra Terrace, Newcastle-upon-Tyne	(E)	Jan. 1900
Harkness, Richard, Grange Road, West Hartlepool ...	(S SUR)	Nov. 1884

ELECTED.

Haswell, Wm. Spence, c/o Messrs. Tangye, Ltd., 3, St. Nicholas Buildings, Newcastle-upon-Tyne ... ... (E) Oct. 1900
Haussman, B., c/o Messrs. The Russian Steam Navigation & Trading Co., Odessa ... ... (E) Feb. 1899
Hay, John, "Wansfell," The Grove, Finchley, London, N. ... (E) Nov. 1901
Hayashida, N., c/o Mitsubishi Dockyard & Engine Works, Nagasaki, Japan ... . (E) Oct. 1902
Hayhurst, James, 41, Warrington Road, Newcastle-upon-Tyne .. (C E) Nov. 1901
Head, William, Manager, Victoria Shipyard, Goole ... ... (S) Feb. 1901
Headlam, Robert, New Park Terrace, Hartburn Lane, Stockton-on-Tees ... ... (E) Nov. 1886
Heck, John H., Lloyd's Register of Shipping, Collingwood Buildings, Newcastle-upon-Tyne ... ... (S SUR) Nov. 1885
Heck, John S., 29, Brighton Grove, Newcastle-upon-Tyne (E) { Graduate, Dec. 1899; Member, Nov. 1904 }
Henderson, Alex., 11, Rua Nova do Almada 1°, Lisbon ... ... (E) April 1893
Henderson, A. M., Bennochy, Elm Grove, West Hartlepool ... (E) Nov. 1890
Henderson, George, 54, Westmorland Road, Newcastle-upon-Tyne ... ... (E) Nov. 1884
Henderson, John, c/o Messrs. A. Henderson & Co., Mount Stewart Square, Cardiff ... ... (E) June 1896
Henderson, J. R., 3, Humbledon View, Sunderland ... ...(SUR) Oct. 1902
Henry, William P., Cragside, St. Aidan's Road, South Shields ... (E) April 1897
Henshall, Samuel, c/o Messrs. Sir Raylton Dixon & Co., Cleveland Dockyard, Middlesbrough ... ... (S) { Graduate, May 1885; Member, Jan. 1894 }
Hepburn, Alfred, c/o Messrs. N.E. Marine Engineering Co., Northumberland Forge, Wallsend-on-Tyne ... ... (F M) Dec. 1890
Hepburn, James M., 17, Grosvenor Place, Newcastle-upon-Tyne ... ... (E) { Graduate, Nov. 1895; Member, Dec. 1901 }
Hesketh, Thomas, Bryn Tirion, Richmond Road, Cardiff ... ...(SUR) April 1896
Heslop, Thomas, 6, Eldon Place, Newcastle-upon-Tyne ... ... (E) Dec. 1900
Hetherington, William, 11, Grace Terrace, Sunderland ... ... (S) Dec. 1899
Hewison, Herbert, 113, Woodbine Avenue, Wallsend-on-Tyne ... (S) Dec. 1900
Higginbotham, George Emerton, c/o Messrs. John H. Holmes & Co., Portland Road, Newcastle-upon-Tyne ... ... (E) Nov. 1900
Higgins, C. F., c/o Messrs. T. Richardsons, Westgarth & Co., Hartlepool Engine Works, Hartlepool... ... ... (E E) Feb. 1898
Hildrey, A. J., 11, Newcastle Road, Sunderland ... ... (S) Nov. 1884
Hills, Lawrence, 2, Somerset Terrace, East Bolden, Newcastle-upon-Tyne ... ... (S) { Graduate, Nov. 1898; Member. Dec. 1901 }
Hinchliffe, Robert, 29, Lish Avenue, Whitley Bay, Northumberland ... ... (S) { Graduate, Nov. 1893; Member, Oct. 1898 }
Hodge, Rowland F. W., c/o Messrs. The Northumberland Shipbuilding Co., Limited, Northumberland Shipyard, Howdon-on-Tyne ... ... (S) Dec. 1890
Hogarth, G. V., 32, Water Lane, Maryland Point, London, E.C. (S) May 1900
Hogg, Archibald, 72, Welbeck Road, Walker-on-Tyne ... ... (S) Jan. 1897
Hogg, James, 8, Lovaine Terrace, North Shields ... ... (B F) Nov. 1889
Hogg, Thomas 8, Lovaine Terrace, North Shields ... ... (E) Feb. 1903
Hök, Wilhelm, 10, Karlaplan, Stockholm, Sweden ... ... (S) Oct. 1886
Hollis, Henry E., 40 Union Street, Glasgow ... ... (I & S M) Feb. 1858

ELECTED.

Holmes, John H., Wellburn, Jesmond Dene Road, Newcastle-upon-Tyne ... ... (E E) Jan. 1888

Holmes, Stephen, 15, Park Road, Jarrow-on-Tyne ... (E) { Graduate, Dec. 1901 / Member, Oct. 1905

Houston, John, 7 Thornhill Crescent, Sunderland ... ... (E) Nov. 1894

Howie, Robert, Messrs. Lloyds Register of Shipping, 56, John Street, Sunderland ... . (SS) Oct. 1904

Hughes, Thos. Charles, 8, Oxnam Crescent, Spital Tongues, Newcastle-upon-Tyne ... ... (E) { Graduate, Nov. 1893 / Member, Nov. 1897

Humphreys, George, Ashfield, Northumberland Avenue, Forest Hall, Northumberland ... ... (E) Jan. 1902

Hunt, Allen E., 11, St. Cuthbert's Terrace, Bensham, Gateshead (SUR) Feb. 1901

Hunter, George B., Messrs. Swan, Hunter & Wigham Richardson, Ltd., Wallsend-on-Tyne ... ... (S) Nov. 1884

Hunter, George Ernest, Aykleyheads, Durham ... (S) { Graduate, Feb. 1898 / Member, Nov. 1899

Hunter, Joseph Gilbert, Lloyds Register of Shipping, P.O. Box No. 671, Newport News, Va., U.S.A. ... ... (SUR) Feb. 1900

Hunter, J. W., 22, Argyle Square, Sunderland ... ... (E) May 1885

Hunter, Summers, c/o Messrs. N.E. Marine Engineering Co., Northumberland Engine Works, Wallsend-on-Tyne ... ... (E) Nov. 1885

Hutchinson, C. W., 6, Park Parade, Westmoreland Road, Newcastle-on-Tyne ... ... (E) Nov. 1884

Hutchison, J., Board of Trade Offices, Middlesbrough ... ...(SUR) Dec. 1891

Hutchinson, Wesley, B.A., Technical Institution, Luton, Bedfordshire ... ... (E) Oct. 1891

Hyslop, Alfred M., c/o Messrs. Boothroyd, Hyslop & Co., Akenside Street, Bootle, Liverpool ... ... (E) Mar. 1900

I.

Inglis, John, c/o Messrs. Hawthorn & Co., Leith ... ... (S) April 1887

Inglis, John, LL.D., Pointhouse Shipyard, Partick, Glasgow (E & S) Oct. 1886

Ions, Thos. R., 11, Newcastle Street, North Shields (E) May 1902

ELECTED.

Johnson, Alexander A., Bank Chambers, Sandhill, Newcastle-upon-Tyne ... ... (E) Feb. 1893
Johnson, Johan, 16, Magasinsgatan, Gothenburg, Sweden ... (S) May 1885
Johnson, Joseph, Bentham Buildings, Side, Newcastle-upon-Tyne (E) May 1901
Johnson, T. Allan, 64, Cathedral Road, Cardiff ... ... (S) Nov. 1884
Johnston, J. M'Fetridge, 97, Duncairn Gardens, Belfast, Ireland ... ... (S) { Graduate, Nov. 1903; Member, Oct. 1904 }
Jones, Arthur P., 165, Chepstow Road, Newport, Mon. ... ... (E) April 1903
Jones, George, c/o Messrs. W. Gray & Co., Shipyard, West Hartlepool ... ... (S) Oct. 1888

K.

Kapadia, Framjee Dorabjee, c/o Messrs. The Ahmedabad Manufacturing and Calico-Printing Co., Ltd., Jamalpur Gate, Ahmedabad, British India ... ... (E) Feb. 1903
Keene, H. R., Lloyd's Register of Shipping, Ouest Quai, 28, Katendyk, Antwerp ... ... (E) { Graduate, May 1885; Member, April 1887 }
Kelly, A. Wardle, 82, Kingsley Terrace, Newcastle-upon-Tyne ... (E) Oct. 1902
Kemp, Herbert J., 18, Derbyshire Lane, Stretford, Manchester ... (E) Nov. 1904
Kendall, Stonard O., Lloyd's Register of Shipping, Collingwood Buildings, Newcastle-upon-Tyne ... ...(SUR) Mar. 1891
Kennedy, William, 14, Gladstone Street, Hartlepool ... ... (E) April 1900
Kerfoot, James, Messrs. The Antwerp Engineering Co., Rue des Indes, Antwerp ... ... (E) Oct. 1892
Kerr, Robert, Bank Chambers, Mosley Street, Newcastle-upon-Tyne ... ... (E) Oct. 1902
King, John, Surveyor's Office, Board of Trade, Liverpool ... ... (S) { Graduate, Dec. 1890; Member, Oct. 1892 }
Kirby, John Storm, 4, Westoe Terrace, South Shields ... ... (E) Mar. 1899
Kirkaldy, John, 21, Ground Floor, Leadenhall House, 101, Leadenhall Street, London, E.C. ... ... (E) Nov. 1885
Kitching, J. F., 24, Fenchurch Street, London, E.C. ... ... (E) Nov. 1890
Knox, Robert, 14, West Avenue, Gosforth, Newcastle-upon-Tyne (NA) Dec. 1903
Kyle, Norman M. W., Norwood, West Avenue, Gosforth, Newcastle-upon-Tyne ... ... (E) Nov. 1898

L.

Laws, B. C., Messrs. Lloyd's Register of Shipping, Collingwood Buildings, Newcastle-upon-Tyne ... ... (NA) Nov. 1903
Laing, Andrew, c/o Messrs. Wallsend Slipway and Engineering Co., Wallsend-on-Tyne ... ... (E) Oct. 1892
Laing, Hugh, Deptford Shipyard, Sunderland ... ... (N A) April 1897
Laing, John, 5, Tynemouth Road, Heaton, Newcastle-upon-Tyne (E) Nov. 1884
Lamberti, James, 271, Albert Road, Jarrow-on-Tyne ... ... (E) May 1904
Landreth, Cowen, 34, Simonside Terrace, Newcastle-upon-Tyne ... (E) Mar. 1896
Latta, James G., 78, Billiter Buildings, Billiter Street, London, E.C. ... ... (C E) Mar. 1902
Le Rossignol, Alfred Ernest, 27, Great George Street, Westminster, London, S.W. ... ... (E E) Nov. 1902
Leach, Thos. A. Wm. ... ... (E) May 1903

		ELECTED.
Leathard, Thomas Surtees, 13, Otto Terrace, Sunderland	(SUR)	April 1899
Lee, Hugh Warren, 88, Manor House Road, Jesmond, Newcastle-upon-Tyne	(E)	Graduate, Dec. 1899 Member, Jan. 1902
Lees, Charles, Chase Lane, Wickwar, Gloucester	(E)	Oct. 1902
Lewins, Frank, Rosehill, Willington-on-Tyne	(E)	Dec. 1895
Liddell, J., c/o Messrs. W. Denny & Co., Engine Works, Dumbarton...	(E)	Nov. 1884
Lie, Gotfred, Det Bergenske Dampskibsselskab, Bergen	(E)	Jan. 1895
Lindfors, Hugo, Surveyor to Lloyd's Register of Shipping, 16 Alexandersgatan, Helsingfors, Finland	(SUR)	May 1889
Lineham, Wilfrid J., Jesmond, 21, Newstead Road, Lee, London, S.E.	(E)	Oct. 1890
Link, Rolls Percival, 273, Cleveland Street, Birkenhead	(CE)	Mar. 1901
Lishman, John J., Jun., 1, Charlton Terrace, Mannamead, Plymouth		Graduate, Dec. 1892 Member, May 1900
Little, Frank, Ward's Buildings, High Bridge, Newcastle-upon-Tyne	(E E)	April 1902
Littleboy, Chas. Wm., The Woodlands, Saltburn-by-the-Sea ...	(S)	Oct. 1887
Littledale, John W. E., c/o Messrs. London Electric Supply Co., L.C.C. Tramways Power Station, Deptford, London, S.E. ...	(E)	May 1896
Livingston, Thos. L., Dunedin House, Jarrow-on-Tyne	(S)	Nov. 1884
Lohmeyr, H. G. C., 53, Crown Street, Newcastle-upon-Tyne ...	(E)	Nov. 1884
Long, A. E., 130, Albert Road, Jarrow-on-Tyne	(S)	Nov. 1884
Lonnon, W., Eng.-Com., R.N., 93, London Road, Portsmouth ...	(E)	Nov. 1903
Loveridge, Wm. Henry, York Road, West Hartlepool	(E)	Feb. 1901
Lowdon, John, Messrs. The Barry Graving Dock and Engineering Co., Limited, Barry Dock, near Cardiff	(E)	Dec. 1891
Lowes, J. Alfred, Maritime Buildings, St. Thomas Street, Sunderland	(E)	Dec. 1903
Luhrs, H., 20, Laburnum Avenue, Wallsend-on-Tyne	(E)	Graduate, Nov. 1899 Member, Oct. 1904
Lumley, Gascoigne, Bonny, Southern Nigeria	(E)	Nov. 1901
Lund, Pearson, Messrs. Noble & Lund, Northern Machine Tool Works, Felling-on-Tyne	(E)	Nov. 1900

[redacted]

ELECTED.

Mackley, Edward N., 57, Kenilworth Road, Newcastle-upon-Tyne (E) April 1901

Mackley, J. R., 57, Kenilworth Road, Newcastle-upon-Tyne (E) { Graduate, Dec. 1902; Member, Oct. 1904

MacMillan, H. M., B.Sc., c/o Messrs. Swan, Hunter & Wigham Richardson, Ltd., Neptune Works, Newcastle-upon-Tyne ... (S) Jan. 1902

Mail, M., Jun., c/o Messrs. Middle Dock and Engineering Co., South Shields ... ... (E) Nov. 1897

Male, Francis John, 12, Normanby Terrace, Gateshead-on-Tyne ... (E) Nov. 1902

Manaira, Guiseppe, c/o Messrs. The Cantiere Navale di Muggiano, Spezia, Italy ... ... (E & N A) Nov. 1893

Marr, James, c/o Messrs. J. L. Thompson & Sons, North Sands Shipyard, Sunderland ... ... (S) Nov. 1884

Marshall, R. J., 53, Larkspur Terrace, Jesmond, Newcastle-upon-Tyne... ... ... (E) Mar. 1887

Marshall, Robert, Board of Trade Surveyor's Office, West Hartlepool ... ... (SUR) Mar. 1901

Martin, William, 26, Beech Avenue, Whitley Bay ... ... (E) Oct. 1902

Mason, George F., Lloyds' Bank Buildings, Mount Stuart Square, Cardiff ... ... (E) Oct. 1895

Mather, Charles, 60, St. George's Terrace, Newcastle-upon-Tyne (SUR) Oct. 1888

Mather, Thomas Brewer, 13, Park Avenue, Whitley Bay, Northumberland ... ... (C E) Nov. 1898

Matheson, William, c/o Messrs. R. & W. Hawthorn, Leslie & Co., Hebburn-on-Tyne... ... ... (S) Dec. 1889

Mathieson, Donald, 30, Jackson Street, Sunderland ... ... (E) Nov. 1898

Matthews, A., Wandsworth Villa, Coldbath Road, Harrogate ... (S) Nov. 1884

Matthews, Jas., c/o Messrs. R. & W. Hawthorn, Leslie & Co., Forth Banks, Newcastle-upon-Tyne ... ... (E) Oct. 1886

Maughan, Philip A., 11, Forsyth Road, West Jesmond, Newcastle-upon-Tyne ... ... (S) Dec. 1900

Maxwell, Thomas, 15, Ashfield Terrace, East, Newcastle-upon-Tyne ... ... (E) Nov. 1899

Maxwell, William Ward, B.Sc., Messrs. H. Charlton & Co., Engineers, Gateshead-on-Tyne ... ... (E) Dec. 1896

McBride, William, Hartburn, Cleveland Road, Hartlepool ... (E) Dec. 1894

McClintock, E. E., 4, Elm Terrace, The Green, Wallsend-on-Tyne (E) Nov. 1903

McCoull, Cecil, Ovington House, Ovington-on-Tyne (EE) { Graduate, Oct. 1895; Member, Dec. 1901

McCullock, T. M., 13, Heaton Road, Newcastle-upon-Tyne ... (S) Feb. 1905

McGillivray, Peter, 16, Normanton Terrace, Newcastle-upon-Tyne ... ... (E) Nov. 1899

McGlashan, Arch., Beechcroft, Clifton Avenue, West Hartlepool (S) Nov. 1885

McGregor, Duncan, 31, Argyle Street, Hebburn ... ... (S) Dec. 1899

McIlvenna, J. G., c/o Messrs. The Tyne Pontoons and Dry Docks Co., Wallsend-on-Tyne ... ... (S) Nov. 1884

McKechnie, James, Messrs. Vickers, Sons & Maxim, Naval Construction Works, Barrow-in-Furness ... ... (E) April 1896

McKenna, Francis, c/o Messrs. E. F. Wailes & Co., 4, St. Nicholas' Buildings, Newcastle-upon-Tyne ... (E) { Graduate, Dec. 1890; Member, Dec. 1896

McLaren, Robert M., Lloyd's Register of Shipping, 321, The Bourse, Philadelphia, U.S.A. ... ... (S) Nov. 1893

		ELECTED.
McLaren, William	(E)	Oct. 1894
McLean, John H. K., Abey House, Plotina Terrace, South Shields	(S)	Mar. 1897
McLellan, William, Collingwood Buildings, Newcastle-upon-Tyne	(CE)	Feb. 1903
McNab, Andrew P. W., Lloyd's Registry of Shipping, Collingwood Buildings, Newcastle-upon-Tyne	(SUR)	May 1903
McNeil, Thomas Young, Ship Drawing Office, Messrs. John Brown & Co., Clydebank, Glasgow	(S)	Oct. 1895
Meagher, H. L., 86, Park Road, Newcastle-upon-Tyne	(E)	Dec. 1896
Mechan, Henry, Scotstoun Ironworks, Scotstoun, Glasgow ...	(E)	May 1898
Meikle, A. F. T., 960, Sauchiehall Street, Glasgow	(E)	Oct. 1904
Meldrum, Michael, Humbledon View, Sunderland	(E)	Dec. 1893
Mellanby, Alex. Lawson, B.Sc., Alislea, Hastings Avenue, Chorlton-cum-Hardy, Manchester	(E)	Graduate, Dec. 1894 Member, Oct. 1896
Melville, James, Messrs. The Sammugar Jute Factory Co., Ltd., Sammugar, Calcutta		Graduate, Feb. 1900 Member, Jan. 1902
Merz, Charles H., 28, Victoria Street, Westminster, London, S.W.	(CE)	Feb. 1903
Metcalf, Thos., 18, John Street, Sunderland... ...	(S)	Graduate, May 1885 Member, Nov. 1893
Metcalfe, C. S., 24, Croft Avenue, Sunderland	(E)	Nov. 1884
Meuwissen, J., 18, Esplanade, Whitley Bay, Northumberland ...	(E)	Nov. 1899
Micheli, Pietro, Jun., Via Sottoripu, No. 1, piano nobile, Genoa, Italy	(E & N A)	Oct. 1888
Middlemass, Thomas, 3, Albert Place, Norton Road, Stockton-on-Tees...	(S)	Oct. 1889
Middleton, H., 20, Lynnwood Avenue, Newcastle-upon-Tyne	(I & S M)	Jan. 1893
Middleton, Robert Alexander, 20, The Grove, Benton, near Newcastle-upon-Tyne	(N A)	Oct. 1892
Millar, Thos., c/o Messrs. Gourlay Bros. & Co., Engineering Department, Dundee, N.B.	(S)	Nov. 1884
Milne, Geo. M., 18 Kirton Park Terrace, North Shields	(E)	Graduate, Feb. 1898 Member, Nov. 1903
Milne, James, Messrs. Hawthorn, Leslie & Co., Hebburn-on-Tyne	(E)	Nov. 1904
Milton, James Edward, Messrs. Lloyd's Register of Shipping, 71, Fenchurch Street, London, E.C.	(SUR)	Nov. 1900

ELECTED.

Moroney, E. F., 115, Warton Terrace, Heaton, Newcastle-upon-Tyne ... ... (E) { Graduate, Feb. 1892 / Member, Nov. 1899 }

Morrison, Robt., 73, High Street, Kirkby Stephen, Westmoreland (E) Nov. 1886

Morrison, William, Lloyd's Register of Shipping, Maritime Buildings, Dundee ... ... (E SUR) Oct. 1890

Morton, John, 7, Hillside, Tunstall Road, Sunderland ... ... (E) Nov. 1902

Morton, Richard Fraser, Lloyd's Register of Shipping, 24, George Street, Sheffield ... ... (E SUR) Oct. 1890

Moss, William, Kirkview, Shipley, Yorkshire ... (E) { Graduate, Jan. 1898 / Member, Dec. 1901 }

Mould, Francis H., 37, Hawthorn Road, Gosforth, Newcastle-upon-Tyne ... ... (E) { Graduate, Feb. 1892 / Member, Jan. 1897 }

Mountain, William Chas., The Hermitage, Gateshead-on-Tyne (E E) Feb. 1889

Mudd, Percival Arthur, Greencliffe, Hartlepool ... (E) { Graduate, Oct. 1900 / Member Oct. 1902 }

Mudie, James Herbert ... ... (E) Dec. 1902

Muir, Alfred Edward, Messrs. J. L. Thompson & Sons, North Sands Shipyard, Sunderland ... ... (S) Mar. 1893

Muir, Robert, 11, Clarence Crescent, Whitley Bay, Northumberland ... ...(SUR) Oct. 1886

Muir, Robert Home, 1, Lovaine Crescent, Newcastle-upon-Tyne ... (S) Oct. 1892

Mulherion, G. F., Birtley Avenue, Tynemouth ... ... (S) Nov. 1884

Munck, Ove. Holger, c/o Messrs. Burmeister & Wain, Shipbuilders, Copenhagen, Denmark ... ... (S) Feb. 1899

Murdock, Thomas Plunkett, 2, Larkspur Terrace, Newcastle-upon-Tyne ... ... (E) Jan. 1904

Murray, Charles W., c/o Messrs. Babcock & Wilcox, Ltd., Ogle House, Farringdon Street, London, E.C. ... ... (E) May 1901

Murray, Councillor W., 30, Simonside Terrace, Newcastle-upon-Tyne ... ... (E) Oct. 1902

Murray, David, 17, Denwick Terrace, Tynemouth ... ... (E) Nov. 1903

Murray, William I., Eng. Lieut., R.N., 5, Belgrave Terrace, Newcastle-upon-Tyne ... ... (E) Jan. 1905

Myles, David, c/o Messrs. N.E. Marine Engineering Co., Northumberland Engine Works, Wallsend-on-Tyne ... ... (E) Nov. 1884

N.

Nastoupil, John, Chief Engineer, Austro-Hungarian Navy, Marine Casino, Pola, Austria ... ... (E) Nov. 1890

Neill, William Reid, 15, Salem Hill South, Sunderland ... ... (E) Dec. 1897

Nelson, George, c/o Messrs. Crosier, Stephens & Co., 2, Collingwood Street, Newcastle-upon-Tyne (E) { Graduate, Jan. 1900 / Member, Dec. 1901 }

Nevins, William, Hazel Rrae, Bradford Road, Shipley, Yorkshire (E) Mar. 1894

Nevison, Thomas C., 18 Milton Road, West Hartlepool ... ... (E) April 1900

Nicholls, H. E., 25, Churchill Street, Sunderland ... ... (E) Nov. 1893

Nichols, Walter W., Clovelly, Glebe Road, Peterborough ... ... (E) May 1895

Nicholson, John S., North View, Mowbray Road, Westoe, South Shields ... ... (E) Nov. 1893

Nicholson, P. F., c/o Messrs. R. & W. Hawthorn, Leslie, & Co., Hebburn-on-Tyne ... ... (S) Feb. 1901

		ELECTED.
Nicol, John M., 15, Linskill Terrace, North Shields	(E)	Nov. 1884
Nicolson, G. C., 8, York Terrace, New Brompton, Kent	(E)	Graduate, Oct. 1885 Member, Oct. 1888
Niven, William A., 7, Guildford Place, Heaton, Newcastle-upon-Tyne...	(E)	Nov. 1898
Nixon, John R., c/o Messrs. Blyth Shipbuilding Co., Ltd., Blyth	(S)	Graduate, Feb. 1898 Member, Oct. 1902
Noble, Harry, Northern Machine Tool Works, Brewery Lane, Felling-on-Tyne	(E)	Nov. 1888
Norman, W. S., White House, Whitby, near Chester	(E)	Nov. 1884
Norton, Harold P., P.O. Box 458, Stratford, c/o Messrs. P. R. Scott, Fairfield & Co., Connecticut, U.S.A.	(E)	Oct. 1890
Noton, F. R., Lloyd's Register of Shipping, 342, Argyle Street, Glasgow	(S)	Nov. 1884
Nunes, Enrique E., 4451 Calle Charcas, Buenos Ayres	(E)	April 1891
Nylen, Otto, 51, Lovaine Place, Jesmond, Newcastle-upon-Tyne	(E S)	Oct. 1904

O.

Oliver, John Wm.	(E)	Dec. 1900
Olsen, Hans B., jun., Victoria Road, West Hartlepool	(E)	Graduate, Feb. 1895 Member, Feb. 1902
O'Neil, J. J., 2, Erith Terrace, Sunderland	(E)	Nov. 1884
Ord, Godfrey C., 72A, The Esplanade, Sunderland	(E E)	Jan. 1897
Orde, E. L., c/o Messrs. Sir W. G. Armstrong, Whitworth & Co., Ltd., Walker Shipyard, Newcastle-upon-Tyne	(E)	Oct. 1887
Orlando, Chev. Giuseppe, Cantiere Navale, Fratelli Orlando, Leghorn	(N A)	Jan. 1893
Ormonde, John Grey, 35, Percy Gardens, Tynemouth	(E)	Nov. 1897
Orr, John, Prof., B.Sc.	(E)	Mar. 1897
Ostens, Joseph, 4, Jackson Street, North Shields	(S)	Nov. 1900
Oxley, Alfred, 13, Beaconsfield Avenue, Low Fell, Gateshead ...	(C E)	Oct. 1902
Oxley, G., 51, Norman Terrace, Howdon-on-Tyne	(S)	Nov. 1884
[redacted]	(E)	Graduate, Dec. 1890

ELECTED.

Pease, J. C. S., Board of Trade Offices, North Shields ... ... (E S) Oct. 1904
Penney, R. H., Board of Trade Offices, 79, Mark Lane, London, E.C. ... ... (S SUR) Nov. 1884
Pepper, W., 9, West Villas, Oxbridge Lane, Stockton-on-Tees ... (E) Nov. 1888
Perrett, Jos. Richard, c/o Messrs. Sir W. S. Armstrong, Whitworth & Co., Elswick Shipyard, Newcastle-upon-Tyne ... ... (N A) Nov. 1896
Pescod, Joseph Hind, 1, Railway Street, Jarrow-on-Tyne (S) { Graduate, Feb. 1898; Member, Jan. 1900 }
Petree, James, Lloyd's Register of Shipping, 12, Oriel Chambers, Water Street, Liverpool ... ... (N A SUR) Oct. 1885
Petterson, Carl Edwin, 16, Magasinsgatan, Gothenburg, Sweden (E) Oct. 1891
Phayer, Robert P., 27, Edwards Road, Whitley Bay, Northumberland ... ... (S) Dec. 1900
Phillips, Joseph, 15, Park Avenue, Wallsend-on-Tyne ... ... (S) Dec. 1902
Philipson, Roland, Tynemouth... ... ... (E) Dec. 1884
Phorson, P., Glen Lea, Roker, Sunderland ... ... (S) Nov. 1884
Pierce, Robert Cecil, Creefleet, Cumberland Gate, Kew, Surrey... ... ... (E E) { Graduate Dec. 1898; Member Dec. 1899 }
Pill, Jos. H., Eng.-Com., R.N., 4, South Parade, Newcastle-upon-Tyne... ... ... (E) Nov. 1903
Pinkney, Edmund W. R., 65, Fern Avenue, Newcastle-upon-Tyne (E) Dec. 1904
Pitt, Frederick William, 552, Chester Road, Old Trafford, Manchester, S.W. ... ... (E SUR) Oct. 1890
Poli, Rodolfo, Chioggia, Italy ... ... (N A) Jan. 1890
Posgate, James S., c/o Messrs. Montezuma Copper Co., Maeozari Sonora, Mexico ... ... (E) { Graduate, Nov. 1895; Member, Dec. 1901 }
Powell, James Richard, Royal Stuart Buildings, Cardiff ... ... (C E) May 1894
Pringle, Alfred, 10, Somerset Terrace, Walker-on-Tyne (S) { Graduate, Dec. 1891; Member, Jan. 1894 }
Pringle, James G., 10, Somerset Terrace, Walker-on-Tyne... ... (S) Oct. 1892
Proven, George, 358, Leith Walk, Leith, N.B. ... ... (E) Mar. 1901
Purdon, Andrew S., Messrs. Irvine's Shipbuilding and Dry Docks Co., Limited, West Hartlepool ... ... (S) Oct. 1892
Purvis, Fred. W., c/o Messrs. Sir W. Gray & Co., Central Shipyard, West Hartlepool ... ... (S) April 1893
Putnam, T., Darlington Forge, Darlington ... ... (FM) Nov. 1884

Q.

Quicke, Herbert John, c/o Messrs. Harfield & Co., Blaydon Ironworks, Blaydon-on-Tyne ... ... (E) Feb. 1891

R.

Ramage, J. T., St. Aubyn's, Bonnington, Edinburgh ... ... (E) April 1887
Ramage, John Anderson, 72, Glen Terrace, Hebburn-on-Tyne ... (S) Oct. 1892
Ranken, David, 8, Brookside Terrace, Sunderland ... ... (E) Nov. 1900
Rappaport, Fred. G., Messrs. Russian Petroleum and Liquid Fuel Co., Baku, South Russia ... ... (E) { Graduate, Mar. 1894; Member, Jan. 1902 }
Rea, Harry Ernest, 10, Park Avenue, Whitley Bay, Northumberland ... ... (S) Dec. 1904
Readhead, Jas., Westoe Hall, South Shields ... ... (S) Nov. 1884

ELECTED.

Readhead, John, Rockcliffe, Westoe, South Shields ... ... (E) Mar. 1886
Readhead, R., South Garth, Westoe Village, South Shields ... (E) Nov. 1884
Readhead, W. B., Beach View, South Shields ... ... (S) Nov. 1886
Redpath, David, 59, Claremont Road, Seaforth, Liverpool ... (E) Nov. 1901
Reed, Joseph, ... (E) Oct. 1889
Reed, J. W., c/o Messrs. Palmer's Shipbuilding and Iron Co., Limited, Engine Works Department, Jarrow-on-Tyne ... (E) Nov. 1884
Reid, John Robert, 8 Richmond Road, Ipswich ... ... (E) Nov. 1898
Reilly, Myles O'Hara, 40, Osborne Avenue, Jesmond, Newcastle-upon-Tyne ... ... (S) Oct. 1902
Rennoldson, C., Messrs. J. P. Rennoldson & Sons, South Shields (S) Jan. 1886
Rennoldson, Jos. M., Fairfield, Westoe, South Shields ... ... (S) Feb. 1886
Renton, James, Engineer's Department, Trinity House, Tower Hill, London, E.C.... ... ... (E) Jan. 1904
Reynolds, Charles H., 155, Fenchurch Street, London, E.C. ... (S) Mar. 1889
Rhodes, Joseph Henry, Stonyroyd, Oxbridge Lane, Stockton-on-Tees ... ... (E) Nov. 1901
Richardson, Jas. Wm., Jesmond, Egerton Park, Rock Ferry, Cheshire ... ... (E & S) Nov. 1903
Richardson, John Lyth, 27, Malborough Avenue, Hull ... ... (E) Nov. 1901
Richardson, Sir Thomas, B.A., Hartlepool Engine Works, Hartlepool ... ... (E) April 1888
Richardson, Wigham, Hindley Hall, Stocksfield, Northumberland (E & S) Nov. 1884
Riley, J. H., Messrs. Riley Bros., Stockton-on-Tees ... ... (B B) May 1893
Riley, John, Grangefield House, Oxbridge Lane, Stockton-on-Tees (B M) Oct. 1902
Riseley, Harry Lorimer, Western Villa, Wallsend-on-Tyne ... (E) Nov. 1900
Ritson, Maurice, Lloyd's Register of Shipping, Piazza S. Giorgio, 32, Genoa ... ... (E SUR) Nov. 1884
Ritson, S. M., 2, Rectory Terrace, Sunderland ... (E) { Graduate, Nov. 1887 / Member, Nov. 1893 }
Roberts, W. C., 18, Windsor Road, Forest Gate, Essex ... ... (E) Mar. 1901
Robertson, R. A. Thanai Tea Estate, Dikom P.O., Dibrugarh, Assam, India ... ... (E) { Graduate, Nov. 1903 / Member, Oct. 1904 }
Robinson, Charles O., Ingleside, North Shields ... (E) { Graduate, Dec. 1893 / Member, Nov. 1899 }

ELECTED.

Robson, James Bertram Lock, 9, North Terrace, Newcastle-upon-Tyne ... ... (E) April 1905
Rodgerson, Wm. John, 35, Grahams Road, Falkirk, Stirlingshire (E) Nov. 1901
Roger, Robert, Stockton Iron Foundry, West Row, Stockton-on-Tees ... ... (E) Nov. 1888
Rogers, Herbert M., 81, Gracechurch Street, London, E.C. (SUR) April 1889
Rolf, George. 8, Bentinck Crescent, Newcastle-upon-Tyne ... (E E) May 1892
Rolland, Alexander, Villa Ruzic, Susak, Fiume, Hungary... ... (E) Mar. 1892
Ropner, Robert, Jun., Hartburn, Stockton-on-Tees ... ... (S) Feb. 1886
Rosenthal, James H., The Quarries, South Croyden, Surrey ... (E) Dec. 1896
Ross, Charles, c/o Messrs. Smith's Dock Co., Ltd., High Docks, South Shields ... ... (E) Jan. 1896
Ross, William, 20, Meadow Side, Dundee ... ... (E) May 1893
Rowan, Jas., 231, Elliott Street, Glasgow ... ... (E) Nov. 1886
Rowell, G. W., 22, Armstrong Road, New Benwell, Newcastle-upon-Tyne ... ... (E) Feb. 1885
Rowell, H. B., Cleugh Brae, Jesmond East Park, Newcastle-upon-Tyne (*Life Member*) ... ... (S) Nov. 1884
Rusden, L., 14, Sanderson Road, Jesmond, Newcastle-upon-Tyne (E) Nov. 1884
Russell, F. Herbert, Scotia Engine Works, Sunderland ... ... (E) Oct. 1891
Rutherford, Robert T., 2, Lochaber Street, Roath Park, Cardiff ... (E) Nov. 1899
Ryder, C. L., 59, Mount Stuart Square, Cardiff ... ... (E) Oct. 1886

S.

Sandeman, John Watt, 1, St. Nicholas' Buildings, Newcastle-upon-Tyne... ... ... (E) Oct. 1891
Sanders, H. W., 253, Rothbury Terrace, Heaton, Newcastle-upon-Tyne ... ... (S) { Graduate, Nov. 1901; Member, Nov. 1903 }
Sanderson, J., 2, Killowen Street, Low Fell, Gateshead ... ... (S) Nov. 1884
Sawyer, John, c/o Messrs. Thos. Wilson, Sons, & Co., Hull ... (E) Oct. 1886
Schofield, Charles, Messrs. The Globe Pneumatic Engineering Co., 49, Milton Avenue, Upton Park, London ... ...
Scope, Robert, Director of Messrs. Clarke, Chapman & Co., Ltd., 48, Bewick Road, Gateshead-on-Tyne ... ... Oct. 1904
Scott, Ernest, Sun Buildings, Collingwood Street, Newcastle-upon-Tyne ... ... (E E) Nov. 1884
Scott, George, 36, Bede Burn Road, Jarrow-on-Tyne ... (S) { Graduate, Jan. 1900; Member, May 1901 }
Scott, James, Selby Lodge, Consett, Co. Durham ... ... (E) Oct. 1892
Scott, Joseph, 49, Leazes Terrace, Newcastle-upon-Tyne (E) { Graduate, Dec. 1891; Member, Oct. 1898 }
Scott, Joseph R., 9, Queen Street, Newcastle-upon-Tyne ... ... (E) Oct. 1887
Scott, Walter, 28, Hollybrook Road, Clontarf, Dublin ... ... (NA) Mar. 1897
Scott, William, c/o Messrs. R. & W. Hawthorn, Leslie & Co., St. Peter's, Newcastle-upon-Tyne ... ... (E) Nov. 1884
Scott, William, Fern Dene, Lake Road West, Roath Park, Cardiff (E) June 1896
Seabury, Edward, Burnt Mill House, Harlow, Essex ... ... (E) Mar. 1886
Seaman, C. J., Newton Heath Iron Works, Manchester ... ... (E) Jan. 1889
Seaton, Albert Edward, Lawn Park, Boxmoor, Herts. ... ... (E) Jan. 1891
See, Horace, 1, Broadway, New York City, U.S.A. ... ... (E) May 1896

ELECTED.

Sergent, William John, 12, College Avenue, Crosby, near Liverpool ... ... (E) Oct. 1898
Shand, H., 31, Larkspur Terrace, Newcastle-upon-Tyne ... ... (E) Nov. 1884
Sharp, A. E., c/o Messrs. The Peninsular and Oriental Steam Navigation Co., 122, Leadenhall Street, London, E.C. ... (E) Nov. 1884
Sharp, Mark, 144, Albert Road, Jarrow-on-Tyne ... ... (E) Dec. 1889
Shaw, Thomas, Messrs. Lloyd's Register of Shipping, Collingwood Buildings, Newcastle-upon-Tyne ... ... (SUR) Nov. 1900
Sheret, William Robert, 8, Rosemount Gardens, Belfast ... ... (S) Nov. 1903
Short, John Gill, East Side, Tyne Dock, South Shields ... ... (NA) Feb. 1899
Short, Jos., 13, John Street, Sunderland ... ... (S) Nov. 1884
Short, Thomas S., c/o Messrs. Short Brothers, Pallion, Sunderland ... ... (S { Graduate, Oct. 1892; Member, May 1899
Shute A. E., 12, Clyde View, Partick, Glasgow ... ... (E) Dec. 1892
Simpson, James, M., Eng.-Lieut., R.N., c/o The Admiralty, Whitehall, London, S.W. ... ... (E) Nov. 1901
Sinclair, Charles E., 18, James Street, Liverpool ... ... (C E) Jan. 1902
Sinclair, W. Rendall, 1 Stratford Villas, Heaton, Newcastle-upon-Tyne ... ... (E) { Graduate, Nov. 1901; Member, Dec. 1903
Singleton, Thomas, 46, Drury Buildings, Water Street, Liverpool (F) Apr. 1903
Sinton, John K., Bentham Buildings, 37, Side, Newcastle-upon-Tyne (E) Nov. 1885
Sisson, Wm., Gloucester ... ... (E & N A) Oct. 1888
Sivewright, G. W., 5, Radcliffe Terrace, Hartlepool ... ... (S) Nov. 1886
Skentelbery, Charles, c/o Messrs. Jacobs, Davies, and Barringer, 95, Milk Street, Boston, U.S.A. ... ... (E) Oct. 1900
Skentelbery, Joseph W., 7, Washington Terrace, North Shields ... (E) Dec. 1900
Skentelbery, G. Arthur, 22, Lansdowne Terrace, Gosforth, Newcastle-upon-Tyne ... ... (S) Oct. 1902
Skinner, Leslie, Westoe, South Shields ... ... (S) { Graduate, Dec. 1886; Member, Oct. 1891
Smith, C. E., Cowesby, Clifton Avenue, West Hartlepool ... (E) Nov. 1888
Smith, Chas. R., 17, Claremont Place, Newcastle-upon-Tyne ... (E) Nov. 1903
Smith, E. J., Brandon House, Haughton-le-Skerne, Darlington ... (E) Dec. 1900
Smith, L. Eustace, Roseworth Cottage, Moor Road, Gosforth, Newcastle-upon-Tyne ... ... (E) { Graduate, Oct. 1889; Member, Oct. 1892

ELECTED.

Spencer, J. W., Newburn Steel Works, Newburn-on-Tyne ... (E) Feb. 1885
Squire, Charles E., c/o Messrs. Underground Electric Railway Co. of London, Ltd., Lot's Rd, Chelsea, London, S.W. (E E) { Graduate, Nov. 1893; Member, Oct. 1898
Staig, William Andrew, Station Road, Wallsend-on-Tyne ... (E) Feb. 1897
Stanley, John T., 6, Belmont Gardens, West Hartlepool ... ... (E) Oct. 1898
Stephen, A. E., Linthouse, Govan, Glasgow ... ... (E & S) June 1896
Stephens, H. C. J., 94, Fortress Road, Kentish Town, London, N.W. ... ... (E) { Graduate, Oct. 1890; Member, Nov. 1897
Stephenson, C., 2, Elm Terrace, The Green, Wallsend-on-Tyne ... (S) Nov. 1884
Stevenson, Wm., 1, Mosley Street, Newcastle-upon-Tyne... ... (E) Nov. 1884
Stewart, James, 13, Otterburn Terrace, Jesmond, Newcastle-upon-Tyne... ... ... (E) Oct. 1890
Stirling, Andrew, Jun., 1, Greenvale Terrace, Dumbarton... ... (E) Feb. 1888
Stirling, John F., Gilliat House, North Road, Darlington ... ... (F M) Oct. 1902
Stirzaker, J. C., 16, Grosvenor Place, Newcastle-upon-Tyne ... (E) Nov. 1884
Stoddart, A. Lane, York House. Pelaw-on-Tyne ... ... (S) Nov. 1898
Stoddart, J. E., Lloyd's Register of Shipping, 71, Fenchurch Street, London, E.C. .. .. (E SUR) Oct. 1888
Stoney, Gerald, c/o Messrs. C. A. Parsons & Co., Turbinia Works, Heaton, Newcastle-upon-Tyne ... ... (E) May 1902
Stuart, John, 135, Heaton Park Road, Newcastle-upon-Tyne (E) { Graduate, Dec. 1895; Member, Nov. 1901
Stupersky, Antony, 1, North View, Wallsend-on-Tyne ... ... (S) May 1901
Summers, James, 4, Vicarage Terrace, Newtown, Stockton-on-Tees ... ... (E) Mar. 1889
Surtees, Charles, 42, Stansfield Street, Sunderland ... ... (S) Dec. 1900
Surtees, R., 12, Windsor Terrace, Whitley Bay ... ... (E) Nov. 1884
Sutherland. Donald, c/o Messrs. Hawthorn & Co., Ltd., Leith, N.B. (E) Jan. 1905
Swan, Charles Sheriton, c/o Messrs. Swan, Hunter & Wigham Richardson, Ltd., Wallsend-on-Tyne ... ... (S) { Graduate, Nov. 1890; Member, Mar. 1894
Swan, H. F., C.B., Col., Prudhoe Hall, Prudhoe-on-Tyne (*Life Member*) ... ... (S) Nov. 1884
Swinburne, M. W., The Cottage, Jesmond Park, Benton Road, Newcastle-upon-Tyne ... . (E) Nov. 1884
Swinburne, T. M., 18, Bewick Road, Gateshead-on-Tyne ... ... (E) Jan. 1885
Swinney, W., 10, Wentworth Terrace, Westoe Lane, South Shields (E) Dec. 1888
Syme. James, Fairfield Works, Govan, Glasgow ... ... (E) Oct. 1892

T.

Tait, Peter W., 41, Dudley Gardens, Leith, N.B. ... ... (MS) Jan. 1905
Tanaka, T., c/o Mitsui-Bussan, Kaisha, Kuchinotzu, Hizen-no-Kuni, Japan ... ... (E) Oct. 1904
Tate, Chas. H., 7, Side, Newcastle-upon-Tyne ... ... (N A) Nov. 1884
Taylor. Alexander, West Hartford Grange, Cramlington, R.S.O. Northumberland ... ... (E) Nov. 1884
Taylor, J. T. Lloyd. Dock Engineer's Office. Middleton Road, West Hartlepool ... ... (CE) { Graduate, Oct. 1900; Member, May 1903
Taylor, John, 1, St. Alban's Place, Tynemouth ... ... (E) Dec. 1894
Taylor, Martin B., 3, Park Villas. The Green, Wallsend-on-Tyne ... (S) Jan. 1903
Teesdale, John, 86, Mount Pleasant, Barrow-in-Furness ... ... (E) Mar. 1898

ELECTED

Terry, F. Herbert, Messrs. Tyne Brass and Copper Tube Manufacturing Co., Jarrow-on-Tyne ... (M) Feb. 1901

Thackrah, John, 4, Menzone Place, Little Woodhouse Street, Leeds (E) Nov. 1901

Thew, Charlton, 90, Osborne Road, Newcastle-on-Tyne (E) Graduate, Dec. 1899; Member, Nov. 1902

Thomas, Benjamin, 4, Balmoral Terrace, Heaton, Newcastle-upon-Tyne ... (E) Feb. 1899

Thomas, Harold, 43, University Street, Belfast ... (S) Apr. 1903

Thomas, William, 19, Broadhurst Gardens, Hampstead, London, N.W. ... (E) Graduate, Oct. 1895; Member, Nov. 1899

Thompson, C. E., Thornbeck, Thornhill Park, Sunderland ... (S) Nov. 1884

Thompson, Jas., Farringford, Roker, Sunderland ... (E) Dec. 1886

Thompson, Joseph Andrew, North Sands Shipyard, Sunderland ... (S) Nov. 1901

Thompson, Robert Norman, North Sands Shipyard, Sunderland (S) Nov. 1901

Thompson, Robert, North Sand Shipyard, Sunderland ... (M S) Nov. 1884

Thomson, James, M.A., 22, Wentworth Place, Newcastle-upon-Tyne ... (E & N A) Nov. 1899

Thorn, W. H., 5, Waterville Terrace, North Shields ... (E) Nov. 1884

Thornton, James M., 9, Queen's Square, Bristol ... (E) April 1893

Thyne, John Sinclair, 32, Azalea Terrace N., Sunderland (S) Dec. 1899

Tinn, Fred. D., North View, Mowbray Road, South Shields ... (S) Nov. 1891

Tinn, George, 245, Cardigan Terrace, Gateshead-on-Tyne ... (E) Dec. 1897

Tocher, J. W., c/o Messrs. Walsend Slipway and Engineering Co., Walsend-on-Tyne ... (S) Mar. 1898

Todd, George William, 53, Victoria Road, Hebburn-on-Tyne (S) Graduate, Jan. 1898; Member, Dec. 1899

Todd, John P., 21, Stephen Street, Edge Lane, Stretford, near Manchester ... (E) Dec. 1897

Todd, William Surtees, Coronation Buildings, Quayside, Newcastle-upon-Tyne ... (N A) Nov. 1901

Toomer, C. R., Ravensworth, Westoe, South Shields ... (E) Jan. 1899

Toovey, Alfred F., 28, Burdon Terrace, Newcastle-upon-Tyne ... (E) Dec. 1894

Tose, Thomas, 171, Earlham Grove, Forest Gate, Essex ... (E) Mar. 1901

Towers, Edward, Jun., 27, Brandling Park, Newcastle-upon-Tyne (E) Graduate, Nov. 1886; Member, Oct. 1888

ELECTED.

Twaddell, James L., Green Bank, Jarrow-on-Tyne ... ... (S) Oct. 1891
Tweedy, G. F., 1, Grosvenor Villas, Jesmond, Newcastle-upon-Tyne (E) May 1899
Tweedy, John, Kelso House, Fernwood Road, Jesmond, Newcastle-upon-Tyne ... ... (E) Nov. 1884

U.

Ulm, John, The Arsenal, Pola, Austria ... ... (E) Nov. 1885
Urquhart, Douglas M., c/o Messrs. Menzies & Co., Ltd., Old Dock, Leith, N.B. ... ... (S) May 1899

V.

Vardy, George, c/o Messrs. Swan, Hunter & Wigham Richardson, Ltd., Wallsend Shipyard, Wallsend-on-Tyne (E) { Graduate, Oct. 1894; Member, 1898 }
Varty, Bartholomew Snowball, c/o Laurie, 14, Great George Street, Hillhead, Glasgow ... ... (S) { Graduate Oct. 1895; Member May 1901 }
Vianson, N. E., *vid* Corsica 20/5, Genoa, Italy ... ... (E) Dec. 1885
Vick, R. W., Messrs. Furness, Withy & Co., Middleton Shipyard, West Hartlepool ... ... (S) Nov. 1888
Vowell, Josias, Elm Lodge, Reading ... ... (E) Feb. 1901

W.

Wadagaki, Yasuzo, Navy Department, Tokio, Japan ... ... (E) Jan. 1891
Waddingham, William H., 13, Alexandra Place, Newcastle-upon-Tyne ... ... (E) { Graduate, Nov. 1897; Member, Dec. 1902 }
Wailes, William C., 23, Richmond Road, Cardiff ... (E) { Graduate, Nov. 1898; Member, Nov. 1901 }
Wait, Thomas Herbert, Cail's Buildings, Quayside, Newcastle-upon-Tyne ... ... (C E) Dec. 1893
Wake, Tom, 14, Bellesley Terrace, West Hartlepool ... ... (E) April 1892
Walker, Archibald, 143, Leith Walk, Leith, N.B. ... ... (E) April 1887
Walker, Henry, 9, Gladstone Terrace, Gateshead-on-Tyne ... (E E) Feb. 1893
Walker, James, c/o Messrs. River Tyne Commissioners' Office, Bewick Street, Newcastle-upon-Tyne ... ... (C E) Nov. 1898
Walker, John, c/o Messrs. R. Stephenson & Co., Limited, South Street, Newcastle-upon-Tyne ... ... (E & S) Nov. 1891
Wallace, John, 14, Havelock Street, Newcastle-upon-Tyne ... (E) Nov. 1903
Waller, Thomas Naunton, Rushmere, Wylam-on-Tyne ... ... (E) May 1898
Wallis, Robert, Wh.Sc., Point Pleasant House, Wallsend-on-Tyne (E) April 1891
Walter, Max, Norddeutscher Lloyd, Central Bureau, Bremen ... (S) Feb. 1893
Walton, J. G., 26, Fenchurch Street, London, E.C. ... ... (E) Nov. 1884
Walton, Samuel, 5, Tyne View Terrace, South Shields ... ... (E) Dec. 1893
Warburton, J., Greenlands, Cleadon, near Sunderland ... ... (S) Nov. 1884
Warburton, John Arthur, 43, General Graham Street, Sunderland ... ... (E) { Graduate, Mar. 1894; Member, Nov. 1896 }
Ward, Herbert John, The Mill House, Farningham, Kent ... (SUR) Nov. 1898
Ward, John, c o Messrs. W. Denny & Bros., Dumbarton ... ... (S) Dec. 1891
Wardale, Henry, 9, Woodhouse Terrace, Gateshead-on-Tyne ... (E) Feb. 1888
Watson, John, 62, Wandsworth Road, Heaton, Newcastle-upon Tyne ... ... (S) { Graduate, Dec. 1897; Member, Dec. 1901 }

ELECTED.

Watson, Kenneth, 3, Rosella Place, North Shields... (E) { Graduate, Mar. 1899 / Member, Oct. 1904 }

Watson, Thomas Henry, 112, Sidney Grove, Newcastle-upon-Tyne (SUR) Jan. 1896

Watt, Alex. Jas, 15, Croft Terrace, Jarrow-on-Tyne ... ... (E) Nov. 1903

Watts, Philip, Col., F.R.S., LL.D., The Admiralty, London ... (S) Nov. 1885

Wawn, Tom Noel, c/o Messrs. Wawn & Sons, 45, Sunniside West, Sunderland... ... ... (SUR) Jan. 1900

Webster, William Milne, 22, Lesbury Road, Heaton, Newcastle-upon-Tyne ... ... (E) Nov. 1900

Weidemann, Nils, Det-Norske Veritas, Christiania, Norway ...(SUR) Jan. 1892

Weighton, R. L., M.A., 2, Park Villas, Gosforth, Newcastle-upon-Tyne ... ... (E) Nov. 1884

Weir, George Dobie, Sunderland Engine Works, South Docks, Sunderland ... ... (E) Oct. 1894

Weir, John, 46, Lawrence Street, Partick, Glasgow ... ... (E) Nov. 1884

Welton, J. G., 138, Cleveland Road, Sunderland .. .. (E) Nov. 1893

West, Henry H., British and Foreign Chambers, 5, Castle Street, Liverpool ... ... (E & N A) Oct. 1886

Westgarth, Tom, Messrs. Richardsons, Westgarth & Co., Middlesbrough ... ... (E) Oct. 1886

Westmacott, Alfred, Clairvaux, Nettlestone, Isle of Wight ... ... (E) { Graduate, Dec. 1885 / Member, Nov. 1892 }

Westmacott, P. G. B., Rose Mount, Sunninghill, Berks ... ... (E) Nov. 1884

White, A. F., c/o Messrs. Nippon Yusen Kaisha, 2, Fenchurch Avenue, London, E.C. ... ... (E) Feb. 1901

White, C., 13, Mosley Street, Newcastle-upon-Tyne ... ... (E) Nov. 1884

White, R. Saxton, Messrs. Sir W. G. Armstrong, Whitworth & Co., Ltd., Walker Shipyard, Walker-on-Tyne ... ... (S) Nov. 1884

Whitfield, Ernest, 11, Victoria Terrace, Low Fell, Gateshead-on-Tyne... ... ... (E) Dec. 1899

Whyte, James Anderson, 196, Watt Street, Glasgow ... .. (E) May 1902

Whyte, Wm., Eastrigg, Corbridge-on-Tyne ... ... (E) Nov. 1884

Widdas, T. D., 56, Plasturton Avenue, Cardiff ... ... (SUR) April 1885

Widdowfield, John H.. 3, Beaconsfield Terrace, Gateshead-on-Tyne ... ... (E) Nov. 1901

ELECTED.

Wilson, Edmund, 8, Clifton Terrace, Forest Hall, near Newcastle-upon-Tyne ... ... (E) Nov. 1901
Wilson, Henry J. H., "Lancefield," Kellfield Avenue, Low Fell, Gateshead-on-Tyne ... ... (E) Nov. 1895
Wilson, Henry Maxson, 29, Rosebery Crescent, Newcastle-upon-Tyne ... ... (E) May 1902
Wilson, John Reginald, Lyndhurst, Gosforth, Newcastle-upon-Tyne ... ... (E E) { Graduate, Mar. 1894; Member, Dec. 1899
Wimble, Arthur, 10, Ventnor Gardens, Monkseaton ... ... (E) Dec. 1893
Winstanley, P. D., Bureau Veritas Register of Shipping, 155, Fenchurch Street, London ... ... (S) Nov. 1884
Withy, H., Middleton Shipyard, West Hartlepool ... ... (S) Nov. 1884
Wood, Henry Alfred, Oakland, North Ormesby, Middlesbrough-on-Tees ... ... (S) Dec. 1893
Wood, Lionel, 4, Simonside Terrace, Heaton, Newcastle-upon-Tyne ... ... (E E) { Graduate, Nov. 1897; Member, Jan. 1903
Wood, William, 6, Eslington Terrace, Newcastle-upon-Tyne ... (S) Nov. 1897
Woodeson, Wm. A., 13, Richmond Terrace, Gateshead-on-Tyne ... (E) Nov. 1901
Wortley, Henry B., Kent House, Egerton Park, Rock Ferry, Birkenhead... ... ... (S) { Graduate, Jan. 1886; Member, Nov. 1892
Wotherspoon, James Douglas, 39, Hainton Street, Grimsby ... (E) April 1900
Wray, Thomas W., Board of Trade Offices, Sunderland ... ...(SUR) Jan. 1895
Wright, George H., 33, Albury Park Road, Tynemouth (EE) { Graduate, Feb. 1896; Member, Dec. 1901
Wright, R., 5, Hawthorn Terrace, Newcastle-upon-Tyne ... ... (E) Nov. 1884
Wurl, Max, 44, Lovaine Place, Newcastle-upon-Tyne ... ... (E) Nov. 1903
Wynd, William Adam, 8, Dilston Terrace, Gosforth, Newcastle-upon-Tyne ... ... (N A) Feb. 1902

Y.

Young, Andrew, Bureau Veritas, Register of Shipping, 155, Fenchurch Street, London, E.C. ... ... (S) { Graduate, Feb. 1892; Member, May 1893
Young, J. Denholm, 6, Commercial Court, 17, Water Street, Liverpool ... ... (E) Oct. 1888
Younger, R. Elmire House, Heaton, Newcastle-upon-Tyne ... (E) Nov. 1884

Z.

Zeeman, J. H., 147, Bankastraat den Haag ... ... (S) Oct. 1889

ASSOCIATES.

A.

		ELECTED.
Allan, Alex. Selkirk, 16, Denwick Terrace, Tynemouth	(M)	Dec. 1903
Anderson, Daniel G., c/o Messrs. W. Angus & Co., Grainger Street West, Newcastle-upon-Tyne	(A)	Nov. 1893
Armstrong, S., Victoria Road, West Hartlepool	(A)	Nov. 1888
Armstrong, Thomas Henry, c/o Messrs. British Uralite Co., 50 Cannon Street, London, E.C.	(E A)	Nov. 1900

B.

Barklam, George, Braemar, Dudley Port, Staffordshire	(A)	April 1888
Barnes, Henry, 43, Otto Terrace West, Sunderland	(A)	Nov. 1901
Barrie, C. C., 49, Meadowside, Dundee	(S O)	Oct. 1904
Barwick, J. S., Ashbrook Grange, Sunderland	(S O)	Nov. 1884
Beynon, Thomas, Hamburg Chambers, Quayside, Newcastle-upon-Tyne	(E A)	Oct. 1891
Bigge, C. W., Northern Counties Club, Newcastle-upon-Tyne ...	(A)	Dec. 1889
Bingham, Sir J. E., Bart., West Lea, Ranmoor, Sheffield	(M)	Mar. 1895
Bird, William, 22, Percy Gardens, Tynemouth	(A)	May 1896
Borrie, Walter, Messrs. Blair & Co., Ltd., Stockton-on-Tees ...	(A)	Jan. 1899
Bowmer, John J., 8, Tankerville Terrace, Newcastle-upon-Tyne ..	(S O)	Nov. 1901
Brims, D. N., 4, St. Nicholas' Buildings, Newcastle-upon-Tyne ...	(C)	Nov. 1893
Brown, Charles Ernest, 1, Ashleigh Villas, East Boldon, near Sunderland	(A)	Oct. 1900
Brown, Percy Ledger, 66, Saville Street, North Shields	(E A)	Oct. 1896
Brunton, John, 3, Prior's Terrace, Tynemouth	(S O)	Oct. 1886
Bullen, Tempest C., c/o Messrs. H. E. Moss & Co., 8, Exchange Buildings, Newcastle-upon-Tyne	(S O)	Nov. 1891

C.

Carr, Ralph, Thornleigh, Clayton Road, Newcastle-upon-Tyne	(A & S O)	Nov. 1886

ELECTED.

Dodds, John B., 36, Side, Newcastle-upon-Tyne ... ... (CHEM) Oct 1888
Donkin, Geo., Jun., 50, Grove Street, Newcastle-upon-Tyne ... (A) April 1897
Douglas, John, c/o Messrs. Walker & Hall, 60, Grey Street, Newcastle-upon-Tyne ... ... (A) Oct. 1898
Dove, Edward John, 5, St. Nicholas' Buildings, Newcastle-upon-Tyne ... ... (M) Oct. 1890

E.

Eccles, Edward, Royal Insurance Buildings, Queen Street, Newcastle-upon-Tyne (*Life Associate*) ... ... (S O) Oct. 1887
Evans, T. L., Capt., 47, Salisbury Road, Redland, Bristol ... ... (S S) Jan. 1904

F.

Fellows, Alfred, Bergholt House, Park Road, Jarrow-on-Tyne (I & S M) Nov. 1901
Furness, Sir Christopher, Baltic Chambers, West Hartlepool . (S O) Oct. 1888

G.

Gaunt, Richard, The Laurels, New Park Road, Stockton-on-Tees (A) Oct. 1902
Geary, William, 6, Chaloner Terrace W., South Shields ... ...(M S) May 1899
Gore, Thomas Hoskins, 52, Queen's Square, Bristol ... ... (S O) April 1902
Graham, Frank, Sun Buildings, Collingwood Street, Newcastle-upon-Tyne ... ...(E A) Nov. 1891

H.

Hardy, John, Jun., Victoria Road, West Hartlepool ... ... (I M) Nov. 1893
Harland, George, 1, Westoe Crescent, South Shields ... ... (A) Dec. 1888
Harris, John T., c/o Messrs Irvine's Shipbuilding Co., Ltd., West Hartlepool ... ... (A) Mar. 1902
Harrison. Samuel Turner, The Green. Wallsend ... ... (A) Nov. 1897
Harrison, Thomas, 9, Bridge Street, Sunderland ... ... (A) Dec. 1894
Hedley, John H., Elms West, Sunderland ... ... (S) Dec. 1886
Hedley, Robert, 32, Rectory Terrace, Gosforth, Newcastle-upon-Tyne (A) Nov. 1899
Henzell, Chas. Wright, B, Milburn House, Newcastle-upon-Tyne ... ... (A) Nov. 1901
Henzell, Robert, Northern Oil Works, Newcastle-upon-Tyne (*Life Associate*) ... ... (M) Nov. 1893
Heslop, Richard O., M.A., Akenside Hill, Newcastle-upon-Tyne (I & S M) Oct. 1885
Hinchliffe, John, Stoneleigh, Monkseaton, Northumberland ... (A) Nov. 1899
Hodges, Thomas Wm., 86, Osborne Road, Newcastle-upon-Tyne ... ... (A) Nov. 1899
Hogg, John Thomas, Tyneside Brass Works. Barry Docks. South Wales ... ... (I & S M) April 1896
Hollis, John, c/o Messrs. John Brown & Co., Ltd., 144, St. Vincent Street, Glasgow ... ...(S M) May 1901
Holzapfel, Max, D, Milburn House, Newcastle-upon-Tyne ... (M) May 1900

ELECTED.

Hudson, Ralph M., Jun., Tavistock House, Borough Road, Sunderland... ... ... (S O) Dec. 1886
Hunting, Charles S., B, Milburn House, Newcastle-upon-Tyne ... (S O) April 1886

I.

Innes, Charles H., M.A., Rutherford College, Newcastle-upon-Tyne (E) Oct. 1891

J.

Jennings, Albert Edward, 4, The Crescent, Gateshead-on-Tyne ... (M) Nov. 1901
Jobson, W. J., 10, Holly Avenue, Jesmond, Newcastle-upon-Tyne (A) May 1889
Jordan, John George, 6, Cedars Crescent, Ryhope Road, Sunderland (A) Nov. 1892
King, Ernest, c/o Messrs. Mellowes & Co., Corporation Street, Sheffield ... ... (A) April 1903

L.

Levin, Otto, Maritime Buildings, King Street, Newcastle-upon-Tyne ... ... (A) Nov. 1902
Lodwidge, Philip, Baltic Chambers, Sunderland ... ... (A) June 1896
Lord, W. R., 41, Queen's Road, Jesmond, Newcastle-upon-Tyne ...(M M) Feb. 1900
Lucock, George, 45, Lansdowne Terrace, Horsley Hill Road, South Shields ... ... (M) Oct. 1900

M.

Macarthy, George E., 54, Pilgrim Street, Newcastle-upon-Tyne ...(S O) Oct. 1887
Mail, Douglas B., 3, St. George's Terrace, Jesmond, Newcastle-upon-Tyne ... ...(M S) Feb. 1895
Maughan, William, 13, Mosley Street, Newcastle-upon-Tyne ... (A) Feb. 1887
MacIntyre, John, 3, Abbotsford Terrace, Newcastle-upon-Tyne ... (S O) Jan. 1885

O.

ELECTED.

Olsen, Hans Benedick, 70, Church Street, West Hartlepool ... (S O) Mar. 1893

P.

Park, Robert, Lauriston, Blackhill, Co. Durham ... ... (A) Dec. 1897
Parker, George, 62, John Street, Sunderland ... ... (A) Dec. 1899
Petersen, William, 17, Sandhill, Newcastle-upon-Tyne ... ... (S O) Nov. 1893
Pilditch, Alfred, Grange Villa, Jarrow-on-Tyne ... ... (A) Nov. 1903
Pinkney, Thomas, 3, Ashbrook Terrace, Sunderland ... ... (S O) Dec. 1886
Potts, Turnbull, Commercial Buildings, Tyne Docks, South Shields (SUR) Nov. 1898
Pringle, George Frederick, 8, Grainger Street, Newcastle-upon-Tyne... ... ... (E A) May 1901
Proctor, J. H., 22, Hawthorn Terrace, Newcastle-upon-Tyne ... (I M) Nov. 1893

R.

Raine, John, Baltic Chambers, Sunderland ... ... (S O) Nov. 1897
Ramsay, J. W., 13, Northbrook Road, Lee, Kent ... ... (A) Feb. 1885
Ramsay, Norman F., 20, Sanderson Road, Newcastle ... ... (B F) Jan. 1902
Reichwald, A., Finsbury Pavement House, Finsbury Pavement, London, E.C. ... ... (A) Nov. 1884
Reid, Sidney, Printer, Akenside Hill, Newcastle-upon-Tyne ... Nov. 1884
Renwick, G., M.P., Messrs. Fisher, Renwick & Co., Colllingwood Buildings, Newcastle-upon-Tyne ... ... (S O) Nov. 1884
Rimer, William Thomas, ... (M) Nov. 1900
Ritson, Arthur, 30, West Sunniside, Sunderland ... ... (S O) Feb. 1899
Robinson, J., Secretary, Clarendon House, Clayton Street, Newcastle-upon-Tyne ... ... Oct. 1904
Robson, John William, Mercantile Chambers, Quayside, Newcastle-upon-Tyne ... ... (M) April 1896
Rogers, Thomas W., 284, Beverley Road, Hull ... ... (A) May 1901

S.

Scholefield, A., 17, Sandhill, Newcastle-upon-Tyne ... ... (S O) Nov. 1884
Sisson, W. E., 9, Northumberland Terrace, Tynemouth ... ... (A) Nov. 1899
Snowdon, W. F., 32, Side, Newcastle-upon-Tyne ... ... (E A) Dec. 1886
Stallybrass, William S., 30, Dean Street, Newcastle-upon-Tyne ... (M) Mar. 1901
Stephenson, George R., c/o Messrs. N. E. Marine Engineering Co., Northumberland Engine Works, Wallsend ... ... (A) Nov. 1899
Storey, Christopher, 13, Sunbury Avenue, Jesmond, Newcastle-upon-Tyne ... ... (A) April 1896
Sutherland, Arthur M., Eastcliffe, Elmfield Road, Gosforth, Newcastle-upon-Tyne ... ... (S O) Nov. 1897
Swinney, Robt. Nesbit, Messrs. Swinney Bros., Ltd., Morpeth, Northumberland ... ... (A) Nov. 1901

T.

Taylor, Edward, Tyneside Works, Scotswood-on-Tyne ... ... (M) Mar. 1902
Taylor, Swainson T., Tyneside Works, Scotswood-on-Tyne ... (M) Mar. 1902

ELECTED.

Temple, George T., 20, Beach Avenue, Whitley Bay, Northumberland ... ... (A) Jan. 1899
Temple, John, Baltic Chambers, Newcastle-upon-Tyne ... (S U R) Mar 1901
Thompson, V. T., Baltic Chambers, Sunderland ... ...(S O) Dec. 1886
Thompson, Wm. H., 5, Albany Gardens, Whitley Bay, Northumberland .. .. (A) Nov. 1899
Thorpe, Samuel, Market Place, Chambers 74, High Street, Sheffield ... ... (I & S M) Feb. 1901
Todd, John Stanley, Maritime Buildings, Newcastle-upon-Tyne (U) Nov. 1895
Tomkins, Harry, 3, Lorne Terrace, Stockton-on-Tees ... (CONTR) Oct. 1902
Towers, Edward, 27, Brandling Park, Newcastle-upon-Tyne ... (A) Oct. 1888
Towers, Michael G., Clementhorpe, North Shields ... ... (A A) Dec. 1899
Trechmann, Otto K., Church Street, West Hartlepool ... ... (S O) Oct. 1896
Tully, Robert, 9, The Lawe, South Shields ... ... (M S) May 1900
Turner, Edwin, 32, Powell Road, Clapton, London, N.E. ... ... (A) Oct. 1895

W.

Wainford, Edgar H., 3, Woodbine Road, Gosforth, Newcastle-upon-Tyne ... ... (A) Nov. 1899
Wallace, H. S. (*Life Associate*) ... ... (S) May 1899
Ward, Heber, Messrs. Walker & Hall, Sheffield ... ... (A) Feb. 1901
Walton, John Jos., Lloyd's Represent., Lindisferne Holly Avenue, Whitley Bay ... ... Nov. 1903
Watson, Thomas W., Gisburn House, Hartlepool ... ... (M S) Nov. 1890
Weatheral, Henry, 27, Alderson Street, West Hartlepool ... ... (A) Feb. 1893
Weiss, T. L., Marine Superintendent, c/o Messrs. Alex. Grey & Son, 5, Quayside, Newcastle-upon-Tyne ... ... (M S) Nov. 1903
Weller, William, 7, Lovaine Terrace, North Shields ... ... (S O) Dec. 1899
Willis, Thomas W., 93, Clifton Avenue, West Hartlepool ... ... (S O) Nov. 1899
Winstanley, Robt. Hope, 25, Westmoreland Road, Newcastle-upon-Tyne... ... ... (A) Nov. 1897

Y.

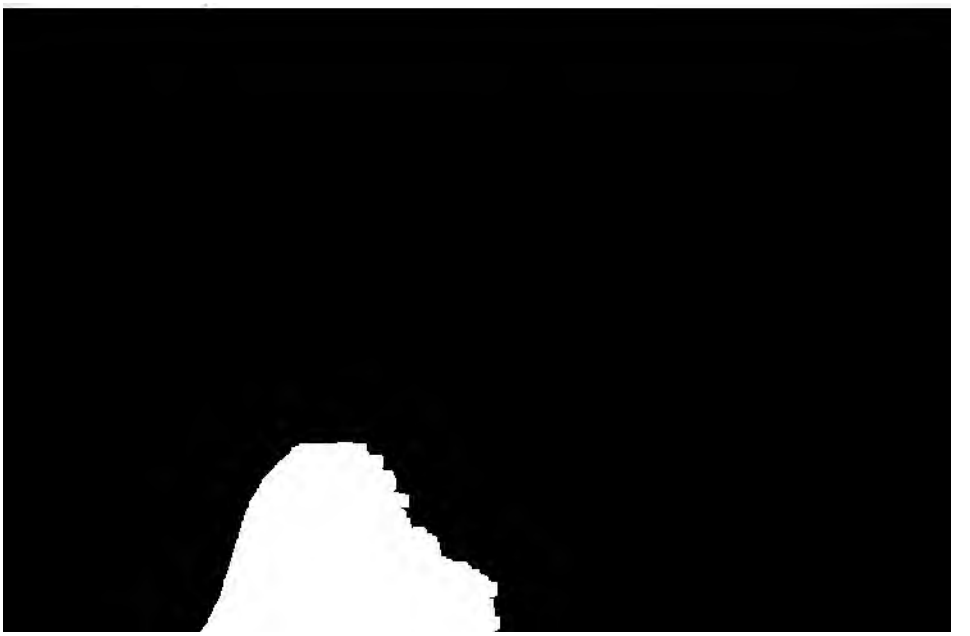

GRADUATES.

A.

	ELECTED.
Allan, Percy F., c/o Messrs. Kennedy & Jenkin, 17 Victoria Street, Westminster, London, S.W.	(E) Nov. 1901
Anderson, Thomas C., Bigges Main House, Wallsend-on-Tyne ...	(E) Mar. 1902
Andrew, John Davis, 33, Osborne Road, Newcastle-upon-Tyne ...	(E) Jan. 1898
Atkinson, Harry, 137, Park Road, Newcastle-upon-Tyne	(E) Nov. 1901
Ayre, Amos L., 14, Trajan Street, South Shields	(S) Nov. 1904

B.

Bailey, Ralph U., 3, South Avenue, Ryton-on-Tyne	(E) Dec. 1901
Bainbridge, Thos. Lindsay, Holmwood, Newcastle-upon-Tyne ...	(S) Dec. 1903
Ballard, Maxwell, Wesley Manse, Lesbury Road, Heaton, Newcastle-on-Tyne	(S) Nov. 1904
Batty, George L., 36, Wharncliff Street, Newcastle-upon-Tyne ...	(EE) Mar. 1903
Bedlington, A. S., 15, Brinkburn Terrace, South Shields	(S) Nov. 1904
Berriman, A. E., 128, Fordwych Road West, Hampstead, London, N.W.	(E E) Feb. 1900
Blake, Leonard James, 20, Laburnum Avenue, Wallsend-upon-Tyne	(E) Dec. 1903
Bland, T. E., 4, Normanby Terrace, Gateshead	(E) Feb. 1905
Bolton, Frank, Beaconsfield Square, Hartlepool	(S) May 1903
Bowmer, Matthew N., 93, Algernon Road, Lewisham, London, S.E.	(E) Dec. 1900
Brown, George M., 4, Hawthorn Terrace, Newcastle-upon-Tyne ...	(EE) Mar. 1903
Brown, Rochester, 67, Osborne Road, Jesmond, Newcastle-upon-Tyne	(E) Jan. 1905
Buchanan, Archibald, 23, Ninth Avenue, Heaton, Newcastle-upon-Tyne	( ) Oct. 1904
Bullen, Harold, 15, Caroline Street, Jarrow-on-Tyne	(E) Dec. 1902
Burnup, E. Cyril, 2, Wentworth Place, Newcastle-upon-Tyne ...	(EE) Mar. 1903

C.

Carr, Stuart, Thornleigh, Jesmond, Newcastle-on-Tyne	(EE) Nov. 1904
Chamberlin, R. J., 7, Horsley Terrace, Tynemouth	(S) Oct. 1904
Collin, Albert H., 23, Castle Street, Leicester	(E) Dec. 1902
Cooper, Wm. L., Park House, Jarrow-on-Tyne	(E) Nov. 1903
Cothay, Frank H., 38, The Avenue, Sunderland	(E) Feb. 1901
Coull, Thomson, Bankhead, South Preston, North Shields ...	(E) Dec. 1902
Cox, Harry Jasper, 21, Victoria Square, Newcastle-upon-Tyne ...	(S) Dec. 1903
Crawford, T. W., 10, Haldane Terrace, Newcastle-upon-Tyne ...	(E) Nov. 1903
Creagh, Edward Curry, 1 Park Road, Sunderland	(E) Nov. 1904
Crow, William George, Holme Lea, Darlington	(E) Nov. 1900
Cruickshank, Andrew, Gerrie House, Park Road, Hebburn-on-Tyne	(E) Nov. 1899
Curry, Albert, 68, Ryehill, Newcastle-upon-Tyne	(E) Nov. 1901
Cuttle, Henry H., 156, Eastbourne Avenue, Gateshead-on-Tyne ...	(E) Jan. 1902

D.

		ELECTED.
Darby, Harold, 1, Ladbroke Terrace, London, W.	(E)	Jan. 1903
Davies, Thomas, 8, Cardiff Street, Aberdare, South Wales ...	(E E)	Mar. 1903
Dearlove, T. M., 4, Normanby Terrace, Gateshead	(E)	Feb. 1905
Dickinson, Thomas, 105, High Park Road, Newcastle-upon-Tyne	(E)	Nov. 1901
Dilworth-Harrison, D. R., Park House, Jarrow-on-Tyne	(E E)	Nov. 1899
Driver, John Wm., 21, Grosvenor Place, North Shields	(E)	Feb. 1904
Dyke, F. S., 54, Leazes Terrace, Newcastle-upon-Tyne	(E)	Nov. 1903

F.

Finlay, George, 27, Clayton Park Square, Newcastle-upon-Tyne...	(E)	Nov. 1902

G.

Gibbs, Alfred Percy, 83, Goldhurst Terrace, South Hampstead, London, N.W.	(E)	Nov. 1901
Glencross, Julian, 33, Rothwell Road, Gosforth, Newcastle-upon-Tyne...	(E E)	Nov. 1904
Green, Fred. Wm., 20, Salisbury Gardens, Newcastle-upon-Tyne	(E)	Jan. 1902
Grey, Alfred Wm., Maidstone Gas Co., Maidstone	(E)	Nov. 1901
Grey, Robert Bertram, 15, Victoria Villas, W., Newcastle-upon-Tyne	(E)	Oct. 1900

H.

Hall, George Brentwood, 123, Osborne Road, Newcastle-upon-Tyne	(E E)	Mar. 1903
Heck, William D., 29, Brighton Grove, Newcastle-upon-Tyne ...	(E)	Jan. 1902
Hedley, Ralph, Jun., 19, Belle Grove Terrace, Newcastle-upon-Tyne	(E E)	Dec. 1899
Henderson, Joseph Nevison, 60, Woodbine Street, Gateshead-upon-Tyne	(E)	Dec. 1903
Hermon-Hodge, Harry Baldwin	(S)	Dec. 1903
Hobson, J. W., Bishop Road, Benwell, Newcastle-upon-Tyne ...	(E)	Nov. 1903
Hogarth, Horace, 63, Rue de Bruxelles, Antwerp	(E E)	April 1904

[redacted]

ELECTED.

Lammas, Fred Harrison, 16, Lovaine Place. Newcastle-upon-Tyne (E) Nov. 1904
Leitch, John Shearer, 114, Heaton Road, Heaton, Newcastle-upon-Tyne ... ... (S) Mar. 1903
Little, John, High Street, Felling-on-Tyne ... ... (E) Feb. 1903
Lloyd, J. A. B., 21, Somerset Terrace, Walker-on-Tyne ... ... (E) Oct. 1904
Lovatt, John James, 15, Kingsley Place, Heaton, Newcastle-upon-Tyne ... ... (E) Jan. 1903

M.

Mallet, James F., The Grove, Goforth, Newcastle-on-Tyne ... (E) Nov. 1904
Matheson, Ian Ross, The Clack, Hebburn-on-Tyne ... ... (S) Dec. 1902
Matthews, John Wm., 28, Mainsforth Terrace West, Sunderland (S) Feb. 1904
McFarlane, A., 65, General Gordon Terrace, Sunderland ... ... (E) Oct. 1904
McRae, Alexander, 103, Chillingham Road N., Heaton, Newcastle-upon-Tyne ... ... (S) Mar. 1903
McWilliams, Edwin J., 95, Wingrove Avenue, Newcastle-upon-Tyne (E E) Mar. 1903
Moore, Edward George, 32, De Grey Street, Elswick, Newcastle-upon-Tyne ... ... (E) Apr. 1904
Mowll, Harold, c/o G. Drury, Esq., The Green, Wallsend-on-Tyne (E) Nov. 1903

N.

Neill, John, 15, Salem Hill South, Sunderland ... ... (E) Nov. 1901
Nichol, Robert, c/o Messrs. Thwaites Bros., Vulcan Ironworks, Bradford ... ... (E) Feb. 1902
Nichols, George Henry, 30, Denmark Street, Gateshead-on-Tyne (E) Oct. 1900

O.

Ogilvie, William, 19, Woodbine Road, Gosforth, Newcastle-upon-Tyne ... ... (E E) Oct. 1902

P.

Phillips, Alexander, 15, Park Avenue, Wallsend-on-Tyne... ... (S) Dec. 1902
Pinder, John c/o Messrs. Adamez, Limited, Sanitary Engineers, Scotswood-on-Tyne ... ... (E) Mar. 1904
Porter, Norman, 77, Goldspink Lane, Newcastle-upon-Tyne ... (E E) April 1905
Pringle, R. A., 138, Tynemouth Road, Heaton, Newcastle-upon-Tyne (E E) Nov. 1901

R.

Readhead, Stanley, Westoe Hall, South Shields ... ... (S) Dec. 1902
Read, Robt., 57, Warrington Road, Newcastle-upon-Tyne ... (E) Nov. 1903
Richardson, Norman Shephard, Eng. Sub-Lieut., R.N., Mosscroft, Gateshead-on-Tyne ... ... (E) Mar. 1901
Robson, Geo., Jun., 9, Wellington Terrace, South Shields ... ... (E) Mar. 1899

S

		ELECTED.
Samson, Robert D., 23, Elmbourne Road, Balham, London, S.W.	(E)	Feb. 1902
Schaeffer, Paul P., 4, Woodbine Avenue, Gosforth, Newcastle-upon-Tyne	(E)	Feb. 1902
Sedcole, W. J., 17, Westoe Road, South Shields	(E)	Feb. 1905
Skelt, Stanley, c/o Messrs. The Sunderland Shipbuilding Co., South Docks, Sunderland...	(S)	Nov. 1904
Slee, Herbert Teal, 37, Grosvenor Place, Newcastle-upon-Tyne ...	(E)	Jan. 1903
Smith, John E., 15, Eslington Terrace, Newcastle-upon-Tyne ...	(E)	Nov. 1897
Spittle, Henry Stuart, 20, Eskdale Terrace, Newcastle-upon-Tyne	(E)	Oct. 1900
Stanger-Leathes, C. Francis, 192, Heaton Road, Heaton, Newcastle-upon-Tyne	(S)	Dec. 1903
Stirzaker, Stanley C., 16, Grosvenor Place, Newcastle-upon-Tyne	(E)	Nov. 1901
Stokoe, M. B., 12, The Oaks, Sunderland	(S)	Oct. 1904

T.

Tait, Robert, 7, Fettes Row, Edinburgh	(S)	Dec. 1903
Talbot-Palmer, Edward, 172, Bede Burn Road, Jarrow-on-Tyne ...	(E)	Feb. 1904
Taylor, John Allibon, 1, St. Alban's Place, Tynemouth	(E)	Feb. 1904
Tchigianoff, Alec., 45, Lovaine Place, Newcastle-upon-Tyne ...	(E)	Nov. 1903
Thomas, Robt. C., 21, Wentworth Place, Newcastle-upon-Tyne ...	(M E)	Nov. 1903
Thompson, John, Box 22, Kimberley, South Africa	(E E)	Mar. 1903

W.

Wardroper, Arthur K., Walker Vicarage, Walker-on-Tyne ...	(E)	Dec. 1901
Watson, Arthur William, 29, Front Street, Tynemouth	(S)	Dec. 1903
Watson, John G. B., 5, Nesham Street, Newcastle-on-Tyne ...	(S)	Jan. 1902
Waymouth, Norman	(E)	Nov. 1901
Webb, Edmund, 231, Cardigan Terrace, Gateshead	(E)	Nov. 1903
Webster, Peter, 22, Lesbury Road, Heaton, Newcastle-upon-Tyne	(S)	Dec. 1903
White, William, 8, Poplar Crescent, Gateshead-on-Tyne	(E)	Nov. 1904
Whiting, W. R. G., Queen's College, Cambridge	(S)	Nov. 1903

NORTH EAST COAST INSTITUTION

OF

ENGINEERS AND SHIPBUILDERS.

TWENTY-FIRST SESSION, 1904-1905.

PROCEEDINGS.

TWENTY-FIRST ANNUAL MEETING OF THE INSTITUTION, HELD IN THE LECTURE THEATRE OF THE LITERARY AND PHILOSOPHICAL SOCIETY, WESTGATE ROAD, NEWCASTLE-UPON-TYNE, ON FRIDAY EVENING, OCTOBER 21ST, 1904.

JOHN TWEEDY, ESQ., J.P., PAST-PRESIDENT, IN THE CHAIR.

The PAST-PRESIDENT said—Letters and telegrams of regret for inability to be present have been received from Sir Benjamin C. Browne, Mr. Wigham Richardson, Sir Theodore Doxford, M.P., and other gentlemen.

The SECRETARY read the minutes of the Closing Meeting of the Twentieth Session, held in Newcastle-upon-Tyne on May 18th, 1904, which were confirmed by the members present and signed by the Past-President.

The PAST-PRESIDENT appointed Mr. D. Andrew and Mr. J. H. Heck to examine the voting papers for new members, and the following gentlemen were declared elected:—

MEMBERS.

Foggan, John, Engineer Surveyor, 122. Wingrove Avenue, Newcastle-upon-Tyne.

Howie, Robert, Ship Surveyor, Messrs. Lloyds Register of Shipping, 56, John Street, Sunderland.

Meikle, A. F. T., Engineer, 960, Sauchiehall Street, Glasgow.

Nylen, Otto, Engineer Surveyor, 1, Chester Street, Newcastle-upon-Tyne.

Pease, J. C. S., Engineer Surveyor (Board of Trade), Board of Trade Offices, North Shields.

Scope, Robert, Director of Messrs. Clarke, Chapman & Co., Ltd., 48, Bewick Road, Gateshead-on-Tyne.

Tanaka, T., Superintendent Engineer, c/o Mitsui-Bussan, Kaisha, Kuchinotzu Hizen-no-Kuni, Japan.

GRADUATES TO MEMBERS.

Currie, H. B., Civil Engineer, 48, Jesmond Road, Newcastle-upon-Tyne.

Dowsen, Charles, Junr., Ship Draughtsman, 21, Croft Street, Jarrow-on-Tyne.

Edmiston, A. R., Engineer, Ivy Cottage, Walton, Liverpool.

Holmes, Stephen, Engineer Draughtsman, 15, Park Road, Jarrow-on-Tyne.

Johnston, J. McF., Ship Draughtsman, 97, Duncairn Gardens, Belfast, Ireland.

Luhrs, H., Marine Engineer, 20, Laburnum Avenue, Wallsend-on-Tyne.

Mackley, J. R., Mechanical Draughtsman, 97, Enfield Road, Elswick, Newcastle-upon-Tyne.

Robertson, R. A., Engineer, Thanai Tea Estate, Dikom P.O., Dibrugarh, Assam, India.

Watson, Kenneth, Engineering Draughtsman, 3, Rosella Place, North Shields.

ASSOCIATES.

Barrie, C. C., Shipowner, 49, Meadowside, Dundee.

Robinson, J., Secretary, Clarendon House, Clayton Street, Newcastle-upon-Tyne.

GRADUATES.

Buchanan, Archibald, Draughtsman 8, Stratford Grove, Heaton, Newcastle-upon-Tyne.

Chamberlin, R. J., Ship Draughtsman, 7, Horsley Terrace, Tynemouth.

Jenkins, H. B., E. Apprentice 6, Holmside Place, Heaton, Newcastle-upon-Tyne.

Lloyd, J. A. B., E. Apprentice, 21, Somerset Terrace, Walker-on-Tyne.

majority. Lord Armstrong, I think, needs no introduction to members of this Institution. His Lordship encourages by his example, and helps by his counsel, all good works. He is a very busy man, and I am sure we all feel grateful to Lord Armstrong for allowing himself to be nominated for the position of President of this Institution. I should like to express the hope that Past-Presidents, Vice-Presidents, Members of Council, Members, Graduates and Associates will co-operate to make the term of office of his Lordship an agreeable period, and the Institution, under his guidance, prosperous and serviceable to the profession and the country. I have now the honour and the pleasure of asking Lord Armstrong to take the chair.

Lord Armstrong took the chair amid hearty and continued applause.

The President said—I beg now to call upon the Secretary to read the Annual Report and Balance Sheet.

The Secretary read the Council Report as follows:—

COUNCIL REPORT.

(TWENTIETH SESSION, 1903-1904.)

The Twentieth Session of the Institution was opened with a conversazione and dance at the kind invitation of the President (John Tweedy, Esq., J.P.) and Mrs. Tweedy, held in Newcastle-upon-Tyne, on Friday evening, October 23rd, 1903, and was attended by a large assemblage of ladies and gentlemen.

During the Session the following papers were read and discussed:—

"Technical Education in Germany." By Mr. Max Wurl.
"Notes on the Construction of Stability Cross Curves from Balanced Paper Sections." By Mr. J. H. Heck.
"Technical Education in which special reference is made to the Admiralty System." By Mr. B. C. Laws.
"Longitudinal Engine Room Bulkheads in Merchant Vessels in relation to Transverse Stability when bilged." By Mr. F. H. Alexander.
"Automatic Governing of Marine Engines." By Mr. H. M. Wilson.
"The Management of Belleville Boilers at Sea." By Eng.-Lieut. E. F. Baker, R.N.

The report of the Committee appointed at the Closing Business Meeting of the Nineteenth Session, May 22nd, 1903, to consider questions which may arise in regard to the education in technical science and general training of youths entered or preparing to enter engineering and shipbuilding works was laid before the Institution at the General Meeting held on December 18th, 1903, and was unanimously adopted. The report is published in Vol. xx. of the *Transactions* of the Institution.

The Institution of Civil Engineers having established a Committee, composed of members from kindred institutions, to consider the training of engineers in all branches, Prof. R. L. Weighton, M.A., was elected to represent this Institution on that Committee.

Mr. John Tweedy having resigned his seat as one of the representatives of this Institution on the Institution of Civil

Engineers' Committee on "Standard Sections," Mr. Andrew Laing was appointed to fill his place.

The two following gentlemen were invited and kindly consented to become Honorary Members of this Institution:—The Right Honourable Lord Armstrong, M.A., D.C.L., D.L., and Sir Andrew Noble, Bart., K.C.B., F.R.S.

It being considered that Bye-law 12 in its original form did not work satisfactorily, it was agreed to alter it to read as follows:—

> The result of the ballot for Officers shall be declared at the Closing Business Meeting, to be held in May, at which meeting general business shall be transacted. The newly-elected Officers shall enter into office on the first day of August following; and the new President shall be installed at the Annual General Meeting in October.

By this alteration the newly-appointed officers will take office on August 1st, being the commencement of the Institution financial year; and also the new President, instead of being installed at the Closing Business Meeting of each Session, will be installed at the Annual Meeting held in October.

The financial statement for the year ending July 30th, 1904, is appended to this report. The Council regrets having to state that the sum of £27 16s. 6d. for subscriptions in arrears has had to be written off as irrecoverable, and in addition there is still due to the Institution the sum of £127 1s. for unpaid subscriptions for the last year.

During the year the following additions have been made to the roll of members:—Honorary Members, 2; Members, 40;

decease of Mr. H. Fownes and Mr. A. G. Schaeffer:—Mr. James Marr in the place of Mr. H. Fownes; and Mr. Robert Holme Muir in the place of Mr. A. G. Schaeffer. Mr. R. Saxton White was elected a member of Council in the place of Mr. James Marr.

The total number of members now enrolled is as follows:—

Honorary Members	5
Life Members	8
Members	868
Life Associates	3
Associates	136
Graduates	111
	1,131

GRADUATE SECTION.

During the Fifteenth Session of the Graduate Section seven meetings were held.

At the opening meeting the Chairman (Mr. W. H. Waddingham) delivered his address, the subject being "Producer Gas and its Uses," and during the Session the following papers were read and discussed:—

"The Future Prospects of Automobilism." By Mr. A. E. Berriman.
"The Relation of Indicated Horse Power to Speed in Steam Vessels." By Mr. M. H. Burgess.
"Injectors and Ejectors." By Mr. J. T. Lloyd Taylor.
"The Progress of Electrical Engineering." By Mr. R. A. Pringle.
"The Application of Oil Fuel to Marine Propulsion." By Mr. H. B. Donaldson.

The following places of interest were visited:—

The Electric Works of Messrs. J. H. Holmes & Co., Newcastle-upon-Tyne.
The Engineering Works of Messrs. George Clark, Ltd., Sunderland.
Messrs. The Newcastle & District Electric Lighting Co's. Power Station, Forth Banks, Newcastle-upon-Tyne.

The thanks of the Institution are due to the principals and officials of these establishments for the kindness and courtesy extended to the junior members.

The following awards were presented to the authors of papers read before the section during the Fourteenth Session:—

The sum of £2 to Mr. H. Bocler, for his paper on "Rudders."

The sum of £2 to Mr. T. C. Fortune, for his paper on "The Stresses produced in the Working Parts of a Marine Engine."

The sum of £1 to Mr. P. F. Allan, for his paper on "A Short Description of Street Railway Work."

The sum of £1 to Mr. A. E. Berriman, for his paper on "The Growth of Automobilism in Public Highways."

The sum of £1 to Mr. R. Robson, for his paper on "The Comparison between Different Systems of Charging for Electricity."

Mr. Kenneth Watson was elected Chairman and Mr. T. C. Fortune was re-elected Honorary Secretary of this section for the current year.

The PRESIDENT said—I beg to move that the Report and Balance Sheet be adopted.

The proposal was carried by acclamation.

THE BALANCE SHEET FOR SESSION ENDING 31ST JULY, 1904.

Liabilities.

		£ s. d.	£ s. d.
Gold Medals' Fund—			
Amount at 31st July, 1903		£305 19 5	
Interest on Investment		9 1 4	
			315 0 9
Graduates' Award Fund—			
Amount at 31st July, 1903 ...	£226 13 10		
Interest on Investment ...	7 3 6		
		233 17 4	
Less—Awards for Papers		11 0 0	
			222 17 4
Payments by Life Members and Associates—			
Amount at 31st July, 1903			252 0 0
General Capital as at 31st July, 1903		2,775 3 11	
Revenue Account		234 14 6	
			3,009 18 5
			£3,799 16 6

Audited and certified,

R. W. SISSON, F.C.A.

Newcastle-upon-Tyne,
30th September, 1904.

Assets.

		£ s. d.	£ s. d.
Subscriptions in Arrear—			
Session 1902-1903		11 11 0	
Session 1903-1904		115 10 0	
			127 1 0
Stock of Transactions, valued at			217 19 0
Office and Library Furniture,			
Safe, etc., as at 31st July, 1903	109 0 0		
Additions	19 19 9		
		128 19 9	
Less—Depreciation		10 19 9	
			118 0 0
Books in Library—			
As at 31st July, 1903 ...	£340 1 2		
Less—Depreciation ...	34 0 0		
		306 1 2	
Additions this Session—			
Purchases		13 14 4	
Books received in exchange for Transactions		30 0 0	
			349 15 6
Tyne Improvement Commissioners—Investment in respect of the following Accounts, viz.:—			
Gold Medals' Fund		274 0 0	
Graduates' Award Fund and Payments by Life Members and Associates		331 0 0	
General Capital—			
As at 31st July, 1903 ...	£1,700 0 0		
Add Investments at 4 per cent. per annum	300 0 0		
		2,000 0 0	
			2,605 0 0
Cash—At Bank			382 1 0
			£3,799 16 6

NORTH-EAST COAST INSTITUTION

STATEMENT OF RECEIPTS AND PAYME

Receipts.

			£	s.	d.	£
To Balance from last Account—						
At Bank						517 1
„ Subscriptions received for Session 1903-1904—						
240 Members at £2 2s.	£504	0 0				
579 Members „ £1 1s.	607	19 0				
133 Associates „ £1 1s.	139	13 0				
105 Graduates „ 10s. 6d.	55	2 6				
1,057			1,306	14	6	
„ Association of Foremen Engineers and Draughtsmen—						
One year's Subscription			20	0	0	
„ Arrears from Session 1902-1903—						
7 Members at £2 2s.	£14	14 0				
26 Members „ £1 1s.	27	6 0				
1 Associate „ £1 1s.	1	1 0				
1 Graduate „ 10s. 6d.	0	10 6				
			43	11	6	
						1,370
„ Transactions sold this Session			17	14	9	
„ Copies of Members' Papers supplied			2	17	0	
						20 1
„ Tyne Improvement Commissioners—						
One Year's Interest to 21st June, 1904, on £605, at 3½ per cent.			21	3	6	
Viz.:—Medal Fund	£274					
Graduates' Award and Life Members' Fund	331					
	£605					
Less—Tax			0	19	8	
						20
One Year's Interest to 10th July, 1904, on £500, at 3¾ per cent.			18	15	0	
Less—Tax			0	18	6	
						17

One Year's Interest to 4th May, 1904, on £300, at 3

ENGINEERS AND SHIPBUILDERS.

FOR SESSION ENDING 31ST JULY, 1904.

Payments.

	£	s.	d.	£	s.	d.
By Transactions and Papers—						
Lithographing	99	16	3			
Printing and Binding	212	16	5			
				312	12	8
,, Stationery and Circulars	69	3	7			
,, Reporting	17	12	0			
,, Rents—						
Offices and Electric Light Fittings	112	12	9			
Lecture Rooms	4	0	0			
Telephone	7	10	0			
				210	18	4
,, Rates, Gas, Electric Light, and Insurance...				28	10	6
,, Salaries—						
Secretary, Salary	400	0	0			
,, Commission	67	10	3			
Assistants'	42	5	6			
,, Postages, Stamps, Post Cards, Parcels, etc.	114	1	8			
,, Secretary's and Office Expenses, Coal, Cleaning, etc. ...	73	7	5			
,, Measured Mile Posts—Rent...	6	6	0			
,, Auditor's Fee	5	5	0			
,, Lantern Expenses	2	3	6			
				710	19	4
,, Library Account—						
New Books				13	14	4
,, Graduates' Award Fund—						
Amounts awarded for Papers				11	0	0
,, Furniture Account—						
Typewriter, Desk, etc.	16	16	9			
Portrait	3	3	0			
				19	19	9
,, Tyne Improvement Commissioners—						
Investment at 4 per cent. per annum				300	0	0
,, Balance at Bank				382	1	0
				£1,989	15	11

THE PRESIDENTIAL ADDRESS.

By The Right Honourable LORD ARMSTRONG, M.A., D.C.L.

[Delivered in Newcastle-upon-Tyne, on October 21st, 1904.]

The President, who was most cordially greeted on rising, said—We are gathered together to-night to inaugurate the Twenty-first Session of this very valuable Institution, and my first words to you must be to thank you most sincerely for the signal and highly appreciated honour that you have conferred upon me by electing me to the presidential chair on the important occasion of the Institution attaining its majority. At the same time, I would point out that although the nature of the anniversary increases the difficulty, already sufficiently great, of delivering a presidential address worthy of the occasion, you have for the first time in the history of the Institution introduced the innovation of electing as your President one who has never had the training of an engineer, and who in no sense of the word can claim to be a scientific expert. This being the case, I may be forgiven when I say that I feel considerable diffidence in assuming the position of your President, and in addressing a body of distinguished engineers and shipbuilders. The only excuse that I can offer for accepting the position at this very important epoch in the history of the Institution is my warm admiration for the scientific and industrial developments for which the engineering enterprise of Tyneside is responsible, and my earnest desire that nothing shall be left undone to stimulate in the future that engineering zeal and activity which is the chief source of the prosperity of our district, and last and not least because I inherit the name and some of the responsibilities of the great engineer who played a prominent part in making the Tyne a great engineering centre.

From the nature of the anniversary, this is a fitting occasion on which to call to mind and place on record a short history of

the rise and progress of the Institution, as showing how small beginnings may often have great results. One day, in the year 1884, nine draughtsmen engaged in the engineering and shipbuilding trades met together under the leadership of Mr. W. G. Spence, now an honoured Vice-President, and agreed to found an institution for the advancement of the science and practice of engineering and shipbuilding, and for the interchange of ideas and information among its members by means of reading and discussion of papers relating thereto, and placing on record its transactions. It was intended to be a local institution, and some proposed that it should be called the Tyneside Institution, others the Northumberland and Durham Institution; but finally, on the suggestion of the late Mr. F. C. Marshall, it was called the North-East Coast Institution. Under the able presidency of Mr. William Boyd the Institution began its First Session in 1884, and from that date up to the present time it has steadily risen both in membership and influence. During the past twenty years the presidential chair has been occupied by Mr. William Boyd, Sir Theodore Doxford, M.P., Mr. F. C. Marshall, Mr. Wigham Richardson, Mr. Robt. Thompson, Sir Thomas Richardson, Colonel Henry Swan, Sir Benjamin C. Browne, Mr. Henry Withy, and Mr. John Tweedy, all men of note in the engineering and shipbuilding world, of whom we in this district may feel justly proud. The Institution, as I have said, was intended to be a local one; but its influence has so increased that it may now be said to be cosmopolitan, as it has representatives in almost every country in the world and its membership has increased

Committee. It deserves also to be placed on record that the new departure inaugurated by Lord Selborne in the education and training of naval officers is in a measure due to the action of this Institution, by whom the then unsatisfactory state of the engineering branch of the Royal Navy was thoroughly discussed. It will thus be seen that besides forming a common meeting ground for engineers and shipbuilders, and taking part in promoting the progress of invention and industry and furthering technical education, it is working out its destiny in other useful directions, and what an important factor the Institution has become in the engineering life of the North-East Coast. To trace at length the development of that life and its relation to the world's industry would require more time than the present occasion allows, and a more specialized knowledge than I am possessed of. There are, however, certain points outstanding in the record of progress which appear noteworthy, even to those of us who are not actively engaged in the technical side of the allied professions of engineering and shipbuilding, and which I think merit the attention of those who are; and I propose to-night to dwell on a few of those phases of invention which have either had their origin on Tyneside or which have had an important bearing on the commercial life of the district. It may truly be said that whatever may have been the case in the distant past, the progress of civilization during the last century has been entirely dependent on, and, indeed, almost synonymous with, the progress of engineering. Improved methods of transportation of goods, of individuals, and, if the expression be permitted, of ideas, combined with the substitution of mechanical power for manual labour, have all worked to ameliorate the condition of the great bulk of humanity. They have, in fact, by extending the variety of interests, and by increasing the rapidity with which routine operations can be performed, been equivalent to the lengthening of human life. A similar remark may with equal justice be made with regard to improvements in artificial lighting. It is true that both these statements are subject to certain qualifications, but they are correct in the main, in that more useful work can now be accomplished by any individual within each twenty-four hours than was possible in the past.

In these developments the North-East Coast has played no inconsiderable part; probably, indeed, its contribution has, in

proportion to its area and population, been greater than that of any other district in the world. The names of Stephenson, of Swan, of Parsons, and of the late Lord Armstrong are familiar in all corners of the globe, and it is no small thing for one relatively minute area to have been responsible for the steam locomotive, the incandescent lamp, the steam turbine, and the development of hydraulic machinery.

The first of these revolutionised the whole aspect of land transit, the second made the application of electricity on a large scale a commercial possibility, and the third bids fair to effect the most important improvements in marine propulsion and in the wholesale generation of electricity that have occurred during recent years.

It is difficult to over-estimate the effect which railways have had in the development of our trade, in maintaining our prosperity, in fostering old industries, and in creating new. Not only is this so in our own case, but we have been largely instrumental in enabling other nations to reap similar benefits—formerly by actually constructing the lines themselves, latterly by furnishing the necessary capital. We have, in addition to the money expended abroad, laid out over £1,000,000,000 on our home lines, a sum nearly 50 per cent. greater than our national debt.

In 1903 our railways carried 450,000,000 tons of goods and over 1,500,000,000 passengers. Each Englishman, therefore, made some thirty railway journeys per annum, or four times as many as does each American, though America is always

During the life of the North-East Coast Institution, however, the most striking of all advances must be placed to the credit of the electrical science. In lighting, in the transmission of messages, in power, in traction, and in industrial chemistry it has revolutionised old conditions. So endless are the applications of electricity, and so marvellous its proved capabilities, that I may be pardoned for dwelling at some length on these.

It has put a new metal, "aluminium," at the disposal of the engineer, a new illuminant, "acetyline," in the hands of the householder, and—when the Japanese permit—a new means of communication, "wireless telegraphy," at the service of the war correspondent. Urban electric tramways were put into commercial operation in this country only some seven years ago, but they now carry as many passengers as do the whole of the railways, vast as that figure is.

The electric motor has invaded the territory of the steam locomotive, and appears likely gradually to supplant it. Perhaps the application of greatest interest to members of this Institution is its uses in power transmission. From figures obtained from the local Electricity Company I find that the use of electricity for power on Tyneside has increased by some 2,000 per cent. in the last five years, that works employing nearly 40,000 men are now operated electrically, and that altogether close on 50,000 H.P. of steam machinery has been displaced. More electricity is sold for power purposes per head of population on the north bank of the Tyne than in any other town or district in the world. The major portion of this electricity is derived from generators and from turbines built on the Tyne by Mr. Parsons, and the whole of this development has occurred within five years. In connection with this vast increase of electric power, supplied, I believe, at a cheaper rate than anywhere else in the world, we must, I think, give the principal measure of praise to the young firm of Messrs. Charles Merz & Co., who, by an energy and activity which may be compared to that displayed by the late Lord Armstrong, Sir Andrew Noble, and his other well-known lieutenants in the building up of the great Elswick Works, have raised in a few years on Tyneside one of the greatest electrical power businesses in existence, and who may be said to be examples of that strenuous life so well insisted on by President Roosevelt.

It is, therefore, I consider, a matter for special congratulation that, in extolling the achievements of this district in the past, we have not to deplore present deterioration or the prospects of future decay. Two of the great inventors mentioned are still with us. The one, Mr. J. C. Swan, is a hale octogenarian, while the other, Mr. Parsons, is at the height of his activity.

Indeed, so far as regards marine engineering and shipbuilding, it is probable that at the present moment the relative position of the North-East Coast is higher as compared with that of the other industrial districts than it has ever been in the past. In recent years there has been turned out of the Tyne the fastest torpedo craft, the most powerful locomotive, and there is now in hand the largest Atlantic liner and the most modern battleship.

We possess the first main line railway that has been electrified, and it is clear that for the present, at any rate, we need not fear comparison with any other district.

Ability and energy, mental and material, are necessary conditions to success. In attempting, then, to analyse the reasons for past progress and present position, it is evident that the industrial activity of the rivers Tyne, Wear and Tees is primarily traceable to the possession of a cheap source of energy in the ample supply of coal available. This, in conjunction with the mental and physical energy of the East Coast population, has produced the results to which we have referred. This individual

fore in consumption, has been clearly before your Institution during its twenty-one years of existence. It has been referred to in various presidential addresses, and Mr. Boyd, your first president, in his inaugural speech emphasised the importance of this point. This expression, "economy of production," necessarily embraces economy in the consumption of all the various items going to the production of any article, and of these items coal is invariably one of the most important. Economy in consumption clearly involves the efficient use of material energy and the intelligent application of mental energy.

Material improvements have been made in recent years in increasing the amount of useful work which can be extracted per pound of coal, and by correspondingly diminishing the power thrown away either in the form of smoke or unutilised heat. Apart altogether from economy, coal in the form of smoke is objectionable, so that every step made in the efficient consumption of fuel reaps a double reward.

It is to electricity that we must look for increasing the ratio which the available power bears to the total power contained in the coal, but as electric generators are for the most part driven by steam engines, it is clear that the energy rendered available by means of electricity cannot exceed that obtainable direct from the best steam engine. When it is borne in mind that the most economical steam engine at present available only converts into useful work about 12 per cent. of the total energy contained in the coal, it will be apparent that there is ample room for improvement in the future, but the vast majority of coal used for power purposes in this district has in the past been consumed in driving engines of a relatively small power and of an exceedingly low efficiency, so that probably only 3 per cent. of the power possessed by the coal was recovered as useful work. The maximum efficiency now attainable is therefore four times as good as the 3 per cent. average, so that, allowing for losses in transmission and distribution, the substitution of electricity generated in central power stations from large and economical steam engines) for the small individual engines installed in the various works has probably reduced the total consumption of coal per available horsepower by 50 per cent.

Two of the chief industries associated with the county of Durham, coke making and the production of pig iron, present

features peculiar to themselves in that they give off a large amount of energy as a bye-product of which at the present moment but little use is made.

If it be possible to erect generating stations in convenient positions so that advantage may be taken of waste energy of this nature, and to transmit the electricity generated to other manufacturers who wish to purchase power, it will be evident that the county of Durham and the North-East Coast occupy an almost unique position as regards the cheap wholesale generation of power for industrial purposes—a position which should give us no inconsiderable advantage in competition with other districts, and also, more particularly, in competition with other lands.

There have lately been introduced into this country and into this neighbourhood patent coking ovens of German design by means of which not only are the ammonia and other bye-products recovered, but the waste heat and waste gases are rendered more readily available than in the old fashioned form of coke oven. The utilisation of this heat involves heavy expenditure in transmission mains and in organization to arrange for the disposal of power, but if these can be provided it is safe to prophesy that the generation of power from such sources for both private and public use will shortly become common practice, and wherever we find a coke oven there we shall also find the means of harnessing the waste energy, and of securing in full the bye-products available. Such a step as this is an important one from the point of view of economy of production. It also largely bears

was about 6 feet, and at high tide 21 feet. At the present time the depth is about 25 feet and 40 feet respectively; opposite the Custom House at Newcastle Quay in the centre channel only 8 feet and 20 feet respectively, at the present time it is 27 feet and 42 feet respectivly; opposite the Elswick Works east jetty it was only about 7 inches and 10 feet 11 inches respectively, now it is 21 feet and 36 feet. It is on record that the men engaged in erecting the High Level Bridge used to wade across the river. Again, prior to the removal by them of the old stone bridge in 1876 and the opening of the Swing Bridge, no vessel larger than a keel could navigate the river above Newcastle Quay. Now the river is navigable for the largest ships of war up to Elswick. In this work they have dredged away 112,000,000 tons of earth. By the erection of the piers at Tynemouth, at a cost of £1,000,000, they have made the Tyne the most important harbour of refuge on the north-east coast. They have erected Northumberland Dock and coal shipping staithes fitted with hydraulic hoists, at which the largest ships can load, at a cost of £700,000, and the Albert Dock, with equipment, at a cost of £900,000, and made possible the great developments that have taken place in shipbuilding, engineering and other industries on the banks of the river, which have resulted in an enormous increase of the trade and commerce of the port. On all these works they have expended the large sum of £6,000,000, but few will deny that in the ceaseless activity on the river banks lies an ample justification and a monument to their prudence and foresight.

In congratulating ourselves on our progress in the past, it must not be forgotten that we secured a long start of rivals in the race for the world's commerce. The effect of this start was to enable us for a time to outdistance all our competitors. They are, however, gradually closing up, and in some classes of work leaving us far behind, so that we cannot afford to throw away the smallest natural advantage, or spare any effort to regain our position.

There is therefore one other point to which I would refer, and which is really merely another argument for economy in production, that is, the need for directing mental energy along proper lines. This can, I am convinced, only be rendered possible by efficient means of technical education, and I am glad

to note that an especial point was made of this in the inaugural address and in the papers read during your last session. In this respect we are excelled by our great competitors of Germany and America, and our lack of progress in certain directions and the extent to which we have fallen behind these two countries is to some extent accounted for by the deficiency of general technical training.

I am glad to say that public attention has of late been forcibly directed to this subject, and therefore, notwithstanding the admirable manner in which my predecessor dealt with it in his last opening address, in view of the scheme for higher education that is being placed before the country, I propose to add a few words to express my conviction that it would not only be a mistake if we were to specialise too much in our schools, but that school education should be directed towards making every man, according to his capacity, as useful as possible to the State; and further, that the foundation of all education must be a thoroughly sound elementary system, in which solid acquirements take the place of showy accomplishments, and training of the moral and reasoning faculties is substituted for the régime of cramming the mind with useless facts. For, as it has often been well said, and proved over and over again in the world's history, the foundation of the prosperity of a great nation is laid in pure domestic life, in commercial integrity, in a high standard of moral worth and of public spirit, in simple habits, in courage, uprightness, and soundness and moderation of judgment, which springs quite as much from character as

or the positions they occupy, and it is important that schools hould be provided where probable leaders may be efficiently rained and educated, and I trust that the public may recognize he necessity of increasing the opportunities for secondary or igher education by the forming of special educational centres hroughout the country, even if it entails a certain increase in ublic expenditure.

The student, on leaving the secondary school at, say, the ge of 16 or 17, will be in a good position to specialise, and to ecome, by means of practical training in the workshop, supplemented by evening classes bearing on the theory of his particular industry held at the local educational centre, that valuble national asset, a scientifically-trained practical man. As our Past-President, Mr. Tweedy, so well pointed out in his ddress, scientific without practical knowledge is of no avail, hile simple practice must give way before the combination of ractice with scientific training. Though much remains to be one, we may congratulate ourselves on the progress that has een made, and the increased facilities for scientific training in he North of England during the life of the Institution; and Newcastle may well be proud of the educational agencies that ave comparatively recently sprung up in her midst and become entres of light and leading.

I feel that I have already detained you too long in my only oo feeble endeavours to capitulate and do justice to some of he great advances that have been made in invention and ndustry during the period that is for the most part covered y the life of the Institution, and I can only express the hope hat future years may be as fruitful of progress as those that we ow look back on, and I cannot do better than conclude this ddress by quoting the words of the late Lord Armstrong when e said: "The tendency of progress is to quicken progress, ecause every acquisition in science is so much vantage ground or fresh attainment. We may expect, therefore, to increase ur speed as we struggle forward; but however high we climb n the pursuit of knowledge we shall still see heights above us, nd the more we extend our view the more conscious we shall e of the immensity that lies beyond."

VOTE OF THANKS TO THE PRESIDENT.

Ald. WILLIAM BOYD, Past-President, said—I feel very greatly complimented by being asked to move a vote of thanks to our President this evening for the address which he has so carefully prepared and which he has been good enough to deliver to us. I cannot but feel that this is a very interesting occasion, because the older amongst us will remember that is just twenty years ago, almost within a few days, that the first inaugural address was delivered in this room to the first members of this Institution; and as, in the autumn of next year, we shall attain our majority, under the presidency of Lord Armstrong, I hope that some steps will be taken to commemorate that event in an appropriate manner. In the first sentences of his address Lord Armstrong deprecated his position on the ground that he was not a technical engineer or shipbuilder. Well, all I can say is that in my humble opinion he is a very good imitation of one; and if some of us had the grasp of the situation that has been indicated by our President this evening we should not have much to complain of. I do not propose to attempt to follow Lord Armstrong through his address, but I am quite sure I am expressing the views of those who have heard it when I say how much we have been struck by the knowledge and the breadth of view of which evidence is given in the address, and by the care which he has bestowed on his duty of addressing you here this evening. There are perhaps two points that stand

ence on behalf of Lord Armstrong himself. He, as you all know, is a man of very great activities, has a very large number of engagements, and is a man who leads a very full life. Therefore I think members of this Institution will do well to recognise that in accepting the office which he has been good enough to take upon himself as President of this Institution he is giving up a good deal of his time and energy for our benefit. It is essential therefore that the members should give him their loyal and hearty support during his years of office. Now I am rather afraid that there may be a tendency to consider that when a man becomes a member of this Institution, and pays—or forgets to pay—his subscription, and gets his *Transactions*, that he has sufficiently discharged the duty that he owes to the President and Council and his fellow members. I venture to submit that that is not the case. If this Institution is to prosper, and to maintain the position which it has been fortunate in attaining, the President and the Council must be supported by the members at the monthly meetings. There is nothing more disheartening for a man—I have said this before, but I venture to repeat it—for a man who has taken the trouble to prepare an address such as that you have just heard, or to prepare a technical paper, of which we hope there are some to come, to find only a score or so of men to come and listen to him and to discuss it; and I venture to say it is one of the essentials of the continued success of this Institution that the President and Council shall be supported by an adequate attendance at the monthly meetings, and as one who is to a certain extent retiring into the background I venture to impress this most strongly upon the younger members of this Institution. I do not think I have anything more to say except again to voice the feeling of the members of this Institution to you, Sir, and to express our thanks for the most interesting and luminous address which you have been good enough to deliver to us to-night, and to propose a vote of thanks to Lord Armstrong for it.

Mr. Henry Withy, Past-President, said—It is with very great pleasure that I rise to second the vote of thanks to Lord Armstrong; and in passing I should like to congratulate Mr. Tweedy upon the successful termination of his term of office.

He has done the Institution a great service in persuading Lord Armstrong to take his place as President. I am very pleased to see, from Lord Armstrong's address, that he has a good opinion of the energy and enterprise of Tyneside and district. We must all agree that anyone who takes a boat from Shields to the Bridge will see more large and important works than he will see anywhere else in the same distance in the whole world. We look with confidence to Lord Armstrong to carry forward the prosperity of the Institution with a great bound during his term of office, and we can assure him of the full support of the Council and members generally. I have very great pleasure in seconding the vote of thanks to Lord Armstrong.

Mr. JOHN TWEEDY, Past-President, said—I should like to say how very happy I feel in that our new President, who in the kindest and nicest way possible consented to occupy his present position, has been received with such hearty approval by the members. I am sure the prosperity of the Institution is assured, at all events for the next two years. That, I think, is perfectly clear as regards the President; it will be doubly secured if Mr. Boyd's advice is followed. As he said, the older of us perhaps have some excuse; but the younger men, I hope, will show their appreciation of Lord Armstrong's consideration for the interest of this district by attending the meetings regularly. I can speak, I think, for the Council. My experience of the last two years is that the members will perform their duties, besides being always considerate, always indulgent; and

technical Institution we are proud to be able to welcome Lord Armstrong in our chair, and pleased to have a President whose address discloses so keen an interest in our work and whose views are broad and stimulating. I ask you, therefore, to join in according to Lord Armstrong a hearty vote of thanks in the usual way.

The motion was carried by acclamation.

The PRESIDENT, in reply, said—I must thank you very much indeed for the exceedingly cordial vote of thanks that you have passed to me on this the first occasion that I have occupied the Presidentship of your Institution. I feel it to be a high honour that the first President of this Institution should have come here to-night and should have proposed a vote of thanks to me in the very felicitous terms that he did; and I must thank you very much for the exceedingly kind and cordial welcome that you have given to me. Reference has been made to the future, and I feel that I shall have a very difficult task before me to live up to the high standard of my predecessors in the chair. I will, however, try and do my best, and fulfil to the best of my ability this duty that you have entrusted to me, and I hope when the time comes, as it has come to Mr. Tweedy to-night, that I fill the chair for the last time, I shall still have before me as large and I hope as cordial an audience as I have to-night. I beg to thank you once more very heartily for your kind vote of thanks to me.

The meeting then dissolved.

;ORTH-EAST COAST INSTITUTION OF ENGINEERS AND SHIPBUILDERS.

TWENTY-FIRST SESSION, 1904-1905.

PROCEEDINGS.

ECOND GENERAL MEETING OF THE SESSION, HELD IN THE LECTURE THEATRE OF THE LITERARY AND PHILOSOPHICAL SOCIETY, WESTGATE ROAD, NEWCASTLE-UPON-TYNE, ON FRIDAY EVENING, NOVEMBER 25TH, 1904.

THE RIGHT HON. LORD ARMSTRONG, M.A., D.C.L., D.L., PRESIDENT, IN THE CHAIR.

The SECRETARY read the minutes of the previous meeting .eld in Newcastle-upon-Tyne on Friday, October 21st, 1904, 'hich were confirmed by the members present and signed by he President.

The PRESIDENT appointed Mr. D. Andrew and Professor t. L. Weighton to examine the voting papers, and the following ew members were elected:—

MEMBERS.

Barker, John H, Consulting Engineer, 2, Collingwood Street, Newcastle-upon-Tyne.

Cadle, Thos. O. M., Engineer, 11, Saville Row, Newcastle-upon-Tyne.

Kemp, Herbert J., Marine Engineer Draughtsman, 107, Park Road, Wallsend-on-Tyne.

Milne, James, Engineer, Messrs. Hawthorn, Leslie & Co., Hebburn-on-Tyne.

GRADUATE TO MEMBER.

Heck, John S., Marine Engineer, 10, Bristol Terrace, Newcastle-upon-Tyne.

GRADUATES.

Ayre, Amos L., Apprentice Ship Draughtsman, 14, Trajan Street, South Shields.
Ballard, Maxwell, Ship Draughtsman, Wesley Manse, Lesbury Road, Heaton, Newcastle-upon-Tyne.
Bedlington, A. S., Ship Draughtsman, 15, Brinkburn Terrace, South Shields.
Carr, Stuart, Electrical Engineer, Thornleigh, Jesmond, Newcastle-upon-Tyne.
Creagh, Edward Curry, Apprentice Engineer, c/o Mrs. Morgan, 33, Camden Street, Southwick-on-Wear, Durham.
Glencross, Julian, Apprentice Electrical Engineer, 33, Rothwell Road, Gosforth, Newcastle-upon-Tyne.
Lammas, Fred. Harrison, Apprentice Engineer, 16, Lovaine Place, Newcastle-upon-Tyne.
Mallett, James F., Apprentice Engineer, The Grove, Gosforth, Newcastle-upon-Tyne.
Skelt, Stanley, Ship Draughtsman, 128, Argyle Street, Hebburn-on-Tyne.
White, William, Apprentice Draughtsman, 8, Poplar Crescent, Gateshead-on-Tyne.
Wilson, Alfred A., Ship Draughtsman, 198, Portland Road, Newcastle-upon-Tyne.

ASSOCIATE.

Darling, Henry, Secretary, Messrs. Smith's Dock Co., Ltd., High Docks, South Shields.

The President said—Our next business is to welcome Mr. W. R. Cummins here, who has come all the way from the South to read us a paper on the very interesting subject of boiler tubes. I do not feel that it is for me to take up your time with any remarks of my own, except to say that this has been for many years a very vexed question, and I am sure we shall all listen to what Mr. Cummins has to say with the greatest

A COMPARISON OF VERTICAL AND HORIZONTAL TUBES IN WATER-TUBE BOILERS.

By W. R. CUMMINS, Member.

[Read in Newcastle-upon-Tyne, on November 25th, 1904.]

The object of this paper is to raise a discussion on the relative merits of vertical and horizontal tubes in water-tube boilers.

Water-tube boilers may be divided roughly, into two classes, namely:—

(1) Those whose tubes run in a vertical or nearly vertical direction.

(2) Those whose tubes run in a horizontal or nearly horizontal direction.

Among those in the first division are:—

Blechynden. (Plate I.)
Cahall. (Plate I.)
Cummins. (Plate II.)
Du Temple.
Field.
Fleming & Ferguson. (Plate III.)
Haystack. (Plate III.)
Hornsby (upright). (Plate IV.)
Normand. (Plate IV.)
Reed.
Stirling. (Plate V.)
Thorneycroft. (Plate VI.)
Tinker.
Weir.
Yarrow. (Plate VI.)

Among those in the second division are:—

Babcock & Wilcox. (Plates VII. and VIII.)
Belleville. (Plate IX.)
Climax. (Plate X.)
Durr. (Plates XI. and XII.)
Hampson. (Plate XIII.)
Haythorn. (Plate XIV.)
Heine.
Hornsby.
Lagrafel d'Allest. (Plate XIV.)
Marshall. (Plate XV.)
Niclausse. (Plate XVI.)
Solignac. (Plate XVI.)
Worthington.

At the outset it will be advisable to enumerate the conditions which have to be fulfilled to make a commercially successful boiler. The necessary conditions for success may be divided into four headings, viz.:—

(1) Conditions affecting the fuel economy.
(2) Conditions affecting the weight and space economy.
(3) Conditions affecting the cost or capital economy.
(4) Conditions affecting the working or maintenance economy.

It is not contended that the conditions above are put down in the order of their importance. The relative importance of the above conditions varies, of course, for each particular case; for instance, condition (2) is not very vital for land boilers, but is of great importance for marine boilers.

Fuel Economy.

Taking the first condition (1), the essentials for maximum economy are:—

(*a*) Perfect combustion.
(*b*) Perfect efficiency of the heating surface.

Combustion Efficiency.—Perfect combustion is an unmixed blessing, and does not interfere with any of the other economical conditions. On the other hand, to secure perfect efficiency of the heating surface would mean an almost unlimited amount of it, which would seriously interfere with weight and cost economy.

We thus see that it is of the greatest importance to secure combustion as near perfection as possible. To secure this end the first desideratum is a sufficiently large combustion chamber. Mere volume of combustion chamber is, however, not sufficient

bustion chamber is a great help to good combustion, as the heat accumulated in the firebricks from a clear fire is given up to the green gases when they are distilled off fresh fuel. For burning oil-fuel a brick-lined furnace or combustion chamber is an absolute necessity.

One of the chief sources of loss in burning fuel in a boiler is due to the excess air which has to be admitted to provide for complete combustion to CO_2 and H_2O. The whole of this excess air has to be heated up to the temperature of the rest of the gases and thus carries off a great deal of heat to the funnel. This source of loss is common to all boilers and may be largely reduced by skilled firing and proper proportioning of firebar spaces and air admission. It is very probable that with oil-fuel the excess of air over that actually required for perfect combustion is not so much as with coal-fuel; hence the furnace efficiency with this fuel should be greater.

Stress has been laid on the importance of the shape of the combustion chamber. The object is, to give the gases as long a time as possible in the combustion chamber to enable them to mix thoroughly with the least possible excess of air. If the gases are hurried through the combustion chamber, a large excess of air must be passed through, to enable the carbonic oxide to pick up with certainty the additional oxygen to complete combustion to CO_2. It was pointed out above that the chamber should have its longest dimension in the direction in which the gases are travelling. In most cases this will mean, that, given a certain volume, the longest dimension should be the height.

It might be argued that, given a certain volume, the shape is quite immaterial, as the speed of the gases would be the same in each case; for instance, it might be said that a combustion chamber of 4 feet by 2 feet sectional area and 4 feet high would be no more effective than a chamber 4 feet by 4 feet by 2 feet high, as the time occupied by the gases in passing through it would be the same in each case. Practically, however, the chamber 2 feet high would be much less efficient on account of the high velocity of the gases passing through the firebars and the fuel. Naturally the area through the bars and through the fuel is restricted; consequently the gases are projected into the combustion chamber at a considerable speed, and

if it has not a sufficient height the gases will have only a short stay in it.

It has been pointed out in a recent paper that the actual time taken by the gases to traverse a boiler is a matter of seconds only. The figures are at first sight rather startling and help one to realise the necessity for the excess air admission found needful for complete combustion.

Having shown the need for a large and high combustion chamber, we can now consider which of the types—the vertical or the horizontal tube—is better adapted to secure this desideratum. The vertical water-tube type seems to be easily ahead of the horizontal tube type in this respect. The Yarrow, Thorneycroft and all the three-drum boilers have ample combustion space over the furnace. The Cahall, Cummins, Hornsby and Stirling (upright) have all good combustion chambers. Coming to horizontal tube types, there seems to be only one with a good efficient combustion chamber, viz., the Lagrafel d'Allest. All the rest have the lower row of tubes just above the firebars, and the green gases coming off the fuel must inevitably be cooled down below combination temperature. In addition to the serious loss of heat thus involved there is also the nuisance of black smoke at the funnel.

The obvious remedy is to raise the tubes bodily further away from the firebars, but this does not lend itself very well to the design of these boilers, one serious disadvantage being the large areas at the sides of the boilers which have to be made as nearly heat tight as possible.

firebrick, and no trouble should ever be experienced in getting good combustion. In the Cahall boiler the furnace and combustion chamber are combined in one and are of firebrick. In the Cummins boiler the combustion chamber is a large free space directly above the furnace.

Heating Surface Efficiency.—We can now pass on to the second essential for perfect combustion, viz., heating surface efficiency.

The maximum possible heat having been obtained in the combustion chamber, it is the duty of the heating surface to transmit as much of this heat to the water in the boiler and allow as little as possible to escape to the funnel. The maximum possible economy will be obtained when the funnel temperature is equal to that of the water in the boiler, but this would entail such a large amount of highly efficient surface as to make the boiler quite impracticable commercially. The amount of heat allowed to escape to the funnel will of course vary with different circumstances. In some cases weight economy is all-important; the heating surface must be restricted and the funnel losses will consequently be high. In other cases weight economy is not so important as cost economy, and the heating surface must be curtailed to keep down the cost. But, whatever the circumstances may be, it is evident that the most efficient surface is, whatever its extent, an unmixed blessing.

The most efficient surface may be defined as that type and arrangement of surface which will, under the same conditions, evaporate the greatest amount of water per square foot. As we are dealing with water-tube boilers only, we need only deal with their most important surface, viz., tube surface. The efficiency of heating surface depends upon:—

(*a*) Thickness of the transmitting surfaces.
(*b*) Circulation of the water.
(*c*) Circulation of the gases.

As regards thickness of the transmitting surfaces, naturally, the thinner the surface the more efficient it will be. This is assuming them to be in the same state of cleanliness. It is sometimes argued that, as regards transmission of heat through metal surfaces, the thickness does not affect the

amount of heat which can be transmitted, and that with a sufficient thermal gradient the same amount of heat can be transmitted through a thick plate as a thin one. This is no doubt true within certain limits, but it is obvious that there must be a certain loss of efficiency if the final temperature of the gases has (in order to get this thermal gradient) to be kept higher than that fixed by other conditions.

The greatest enemy to heat transmission through any surface is scale on the water side and soot on the fire side. This point will be treated of later on.

The smaller the diameter of the water tube the thinner it will be; consequently small diameter tubes should be more efficient than large diameter tubes.

As regards circulation of the water, it is evident that vertical tubes will give a much better and more reliable circulation than horizontal tubes; or, in other words, tubes when placed vertically can safely be made of much smaller diameter than when placed horizontally. At the high rates of evaporation required of the water-tube boiler, the problem is to keep the tube full of solid water. If a plug of steam is allowed to form, the inevitable result will be the burning of the tube. Various devices have been adopted by users of horizontal tubes to prevent the formation of steam plugs: for instance, in the Belleville the feed is forced into the lower part of the tube through a fine jet at a high velocity. In the Babcock the tubes are either made of large diameter (as in the land type) or made as short as possible and with additional inclination (as in the marine

upper end is not impeded by having to pass through narrow and sometimes tortuous headers. Examples of this good feature are given by the Cahall, Cummins, Hornsby, Stirling, Thorneycroft, Yarrow and others.

Passing on now to the third condition affecting the heating surface economy, viz., circulation of the gases, the problem is to extract the maximum amount of heat from the gases. As the velocity of the gases is of necessity very high, the first essential is to arrange for as long a travel as possible when passing over the heating surface to allow sufficient time for the gases to give up their heat. In many of the express boilers, such as the Yarrow and the Thorneycroft, no attempt is made to introduce baffle plates among the tubes. The gases pass through a stack of tubes 2 feet thick, say, and, once through this, pass direct to the funnel. Taking into consideration the high velocity of the gases, the time occupied in passing through the tubes must be exceedingly short and the result must be an unnecessarily high funnel temperature. In the Lagrafel d'Allest—an express boiler—special means are taken to increase the distance travelled by the gas.

The next essential is that the gases be split up into as small streams as possible and that these streams be made to impinge on the heating surface, as, when the gases have left the combustion chamber and entered among the tubes, heat will be given up more readily by convection than by radiation; hence the necessity for intimate contact with the surfaces. In fire-tube boilers the use of spiral retarders has been found advantageous. The effect of these retarders is to break up the hot core in the tube and compel the whole of the gases to come in contact with the tube surface.

It is evident that in order to split up the gases into as many small streams as possible, a large number of small tubes should be used in preference to a small number of large tubes. Staggering the tubes is also an immense advantage, as the streams of gases are being constantly divided and reunited; in fact, the streams of hot gas wrap themselves around the tubes and thus make use of the whole circumference.

There is only one other point to discuss about the circulation of the gases, viz., whether they should be made to travel in the direction of the length of the tube or at right

angles to the length of the tube. The great majority of water-tube boilers make the gases travel at right angles to the tubes, and this appears to be the method best adapted to make the most of the surface. Among the minority who have the gases travelling along the length of the tube are the Stirling, Cahall and Hornsby. In the Belleville, Niclausse, Durr, Babcock (marine) and other boilers of the horizontal tube type, baffle plates are arranged to give as large a travel as possible to the gases, but the design does not allow of anything much better than a straight run through the stack of tubes, the distance travelled being practically rather more than the height in each case. In the Babcock land boiler the gases are given a long travel by means of vertical baffles. The Stirling and Hornsby also secure a long travel by vertical baffles on the nests of tubes. In the Cummins boiler a long travel is secured by fitting a vertical baffle between the innermost and the second row of tubes. This baffle extends round about seven-eighths of the circumference, and the gases are taken away to the funnel from a point opposite to the gap thus left in the baffle.

Summing up the conditions affecting fuel economy, we can safely say that a large and high combustion chamber is an absolute necessity and that vertical tubes, as small in diameter as practicable, are preferable in all respects to horizontal ones. It is equally important that the gases, on leaving the combustion chamber to enter among the tubes, are not rushed through too quickly but are allowed sufficient time to give up their heat. It is also desirable that the gases be split up and

(*a*) Reduction of heating surface.
(*b*) Reduction of scantlings.
(*c*) Reduction of water space.
(*d*) Reduction of steam space.

Reduction of the weight of the heating surface may be done in two ways, viz., by reducing the amount of the surface or by reducing its thickness. By reducing the amount of the surface, fuel economy has to be sacrificed; but a reduction of the thickness has the double advantage of keeping down the weight and increasing the thermal efficiency. Here again we see the advantage of the small diameter tube, and since vertical tubes can be of smaller diameter than horizontal, it follows that they will be more advantageous.

A reduction of scantlings involves a sacrifice of durability and of safety.

Large weight economies can be effected by reducing the water space, the sacrifice generally being that of accessibility. Here again the tube of small diameter has the advantage over one of larger diameter, for instance, two 2 inch tubes have the same surface as one 4 inch tube, but the 2 inch tubes only contain half the weight of water.

Weight economy may also be effected by reducing the steam space. A large steam space means drums of large diameter or length, and the temptation to reduce these is great. The inevitable result of reducing the steam space is to get wet steam. The ridiculously small steam space given to most water-tube boilers has given the whole class a bad name for wet steam. One of the earliest of water-tube boilers—the Haystack boiler—was designed with ample steam space, and no trouble is experienced with wet steam in these boilers although they are almost invariably used in conjunction with paddle engines, which have an unenviable notoriety for inducing priming.

The question of priming and wet steam is a very important one, as a most inefficient boiler, *i.e.*, a boiler which supplies a mixture of half steam and half water, may on test appear to have a better evaporative efficiency than a boiler supplying perfectly dry steam.

The usual method of conducting boiler tests is to weigh the amount of water pumped into the boiler and assume that it is all

evaporated into steam. There is good reason to believe that steam can carry in suspension from 10 per cent. to 15 per cent. of water and still appear "dry." This point will be further treated of in the Appendix. As in the case of the combustion chamber, the shape of the steam space has an important effect on its efficiency. The surface of the water, owing to the circulation and the escape of the steam bubbles, is in a state of agitation, and jets of water are projected up into the steam space. Hence what is required is a steam space having the maximum possible height above the water surface. In the case of the three-drum express boilers the extra weight and space which would be entailed by making the steam drum of sufficiently large diameter to give dry steam must be sacrificed. In most of the horizontal water-tube boilers the steam space is too small, and in all of them the height is too little to secure dry steam. Besides the Haystack boiler before mentioned, the only other boilers of the vertical tube type which have a good steam space are the Cummins and the Fleming & Ferguson, in both of which the tubes are arranged to be withdrawn into the upper drum.

Coming now to the space economy, it is evident that the minimum space will be occupied by those types of boiler whose floor space is equal to the grate area plus the area of the containing walls, provided that the height is reasonable. In fact, for all boilers intended for marine use this space must not be exceeded to any extent. All the horizontal water-tube boilers, such as the Belleville, Niclausse, etc., have the desired minimum floor space. The Yarrow and Thornevcroft type of boiler have

the lightest boiler will be the least costly, that is to say, if the material used is of ordinary standard make. Outside of the question of weight, the constructive design of a boiler has the most effect on the cost. Flat stayed surfaces are probably the most expensive item in boiler work, and the great majority of water-tube boilers have none of this work, the exceptions being the flat headers of the Niclausse, Durr, and Hornsby. The cheapest method of securing the tubes in their plates is apparently that of expanding. The screwed joints of the Belleville and the coned joint of the Niclausse certainly cost more than expanding the ends. The fire casings of water-tube boilers are also a very expensive item, especially when they have to be protected by tiles on the inside. All the three-drum boilers have expensive casings and a considerable area to be protected by tiles, and the same remark applies to all the horizontal tube boilers. In the Cummins boiler the casings are not exposed at any point to the combustion chamber heat. The Stirling, Hornsby, Cahall and Climax boilers have brickwork casings and hence are quite unsuitable for use on board ship. We thus see that in the matter of cost economy there is not much to choose between the two types.

Working or Maintenance Economy.

This brings us to the last division of the paper, viz., conditions affecting the working or maintenance economy, which includes all questions of accessibility for cleaning, facilities for repair and renewals, etc.

Taking, first, accessibility for cleaning purposes, it is evident that access must be had not only to the internal parts of the heating surface but also to the external parts. For adequate examination and cleaning, the very first necessity is of course straight tubes. If the feed water has the slightest tendency to deposit any impurities, the use of straight tubes should be insisted upon, as if any deposit takes place it can be seen and removed with certainty, which is not the case with curved tubes. The usual method of cleaning curved tubes is by a chain; and the man sent into a drum of small capacity, with instructions to clean several hundred tubes, would be more than human if he did not leave some of them in their original state. Among the minor advantages of the straight tube is the feeling of con-

fidence engendered when it can be examined from end to end and incipient defects such as pitting or corrosion can be localised.

As regards actual cleaning or examination, there is not much to choose between the vertical and horizontal tube boiler; but the vertical tube has the immense advantage that scale cannot be so easily deposited in it as in the horizontal tube. This is due to two reasons: firstly, because the circulation through the vertical tube is more rapid and has a scouring action all round the tube; and, secondly, because when cooling down, any suspended matter in the water will drop down through the vertical tubes, but will be deposited on the bottom of the horizontal tube.

Other parts requiring internal access for cleaning are the tube plates and the steam and water drums. These parts, except in the case of some express boilers, are generally fairly accessible in most types.

Coming now to the access to the external part of the heating surface, it is perhaps more important to provide means for keeping this part in a clean state than the internal parts. Deposit on the internal parts of the boiler can be prevented by several means, such as the use of a surface condenser, treating the feed water, etc. There is, however, no known means of doctoring the fuel to prevent it depositing soot on the external surfaces; hence the necessity for efficient means of removing it mechanically. Here again, as before, the vertical tube shows its superiority to the horizontal, as soot cannot grow on to a vertical tube to any appreciable thickness, whereas it can

brush can only be used in one direction, that is to say, it can only brush two sides of every tube. For instance, in the Yarrow boiler the stacks of tubes could be brushed from the stokehold (if it were of sufficient length), but they could not be brushed in the other direction, *i.e.*, thwartships, as the zigzagging of the tubes would prevent it. The same remarks apply to the Babcock and the Durr boilers. The Belleville is peculiarly difficult to clean mechanically.

In the Cummins boiler the tubes have been so arranged that each tube can be swept on four sides, thus cleaning practically the whole circumference of the tube and approximating to the cleanliness obtained by the tube brush in a fire tube. The tubes are arranged in concentric rows, and an equal number of tubes in each row. Each tube is also zigzagged with its neighbour. If this construction is followed out it will be found that the tubes form curved avenues through which a curved tube brush can be used. This curve approximates to an arc of a circle which has its centre in such a position that the brush when fully withdrawn projects only a very short distance radially from the boiler. As there are an equal number of tubes in each row and symmetrically arranged, the brush can be used in both a right-hand and left-hand direction, and thus each tube can be brushed on four sides. Access is given to the tubes by sliding doors arranged in narrow sections, so that only a small portion is exposed to the inrush of cold air when sweeping.

We next come to the question of accessibility for repairs and renewals.

Taking, first, the method of securing the tube ends in their plates or headers, the most usual practice is to expand the tube ends. Notable exceptions are the screwed joints of the Belleville, the conical joints of the Niclausse and the Reed joint. Taking everything into consideration, the expanding method seems to give the best and most practical results. If an expanded tube end does leak, it can always be touched up with the expander; whereas if any of the screwed ends of the Belleville leak,—well, they have got to leak until the element is pulled out on the stokehold floor and repairs can be made.

Next, as regards renewing defective tubes, most of the horizontal tube boilers are well adapted for effecting this easily and expeditiously in the case of a pinhole leak or some such

minor defect. As, however, the horizontal tube is so liable to become overheated and bulged or burst, it becomes impossible to withdraw the damaged tube through the tube plate, and the only way of getting it out is to cut out some of the good tubes in its vicinity. Most of the express boilers have to renew defective tubes by cutting out good ones, the notable exceptions being the Blechynden and the Reed boilers. There is also another vertical tube boiler which has the same defect, viz., the Stirling. In the Cummins boiler the damaged tube can be withdrawn into the upper drum, and there is ample room to get at both ends of the tube for cutting and for using the ordinary standard expander. This same advantage is possessed by the Fleming & Ferguson boiler.

Another important point is to provide sufficiently good access so that every riveted joint may be recaulked both inside and outside. Most of the water-tube boilers of both types allow for this, although in the majority of the express boilers the space for working is very cramped.

The upkeep of brickwork is in some cases a rather heavy item, especially where an intense heat has to be resisted by thin firebricks hung on to vertical plating. The wear and tear on thick brickwork about the level of the firebars is not so much as would be expected and can easily be repaired by ordinary stock firebricks. When, however, vertical plating has to be protected the fireclay tiles have to be secured in some way to the plating, and it is this which causes so much trouble. Many of the vertical and horizontal types of boilers suffer equally

continuously at work, it is a serious disadvantage when intermittent work is required, as, after the boiler is shut down, the large amount of heat stored in the brickwork continues to evaporate the water in the boiler and cold water has to be pumped in long after firing has ceased. In the Cummins boiler the furnace is lined with thick firebrick, the combustion chamber is entirely surrounded by water tubes, the sliding doors, being only exposed to comparatively cold gases, do not need a fireclay face; they are made of two thicknesses of plate filled in with asbestos.

This completes the review of the four conditions necessary to make a commercially successful boiler and the balance of advantages appears to the writer to be with the vertical tube boiler. This is to a great extent confirmed by the last report of the Boiler Committee, who give most praise to the Yarrow boiler. The choice of a boiler, however, must depend entirely on the conditions required in each particular case. On a torpedo boat everything must be sacrificed to weight and space economy. On a battleship or cruiser weight and space are still important, but sacrifices must be made to fuel economy and working economy. On a liner fuel economy and working economy are paramount. On a tramp steamer cost economy is most important. In all cases, however, fuel economy is a vital point and unless a boiler is, *per se*, economical in fuel it will not in the end be able to compete with other boilers of superior economy, however many other virtues it may possess.

In conclusion, the writer hopes that those members, and there must be a great many, who have had actual experience with any type of water-tube boiler will give the benefit of their practical ideas to the Institution.

APPENDIX.

The fuel economy of a boiler is gauged by its overall efficiency, *i.e.*, by the proportion borne by the heat contained in the steam delivered by the boiler to the maximum heat of combustion of the coal used.

It is very essential in a boiler test to know the quality of the steam produced. As pointed out before, steam is capable of holding in suspense a large percentage of water. It may

perhaps amount to 20 per cent. without any "priming" being noticed. The apparatus generally used to test the quality of the steam is the Barrus calorimeter. The action of this instrument is as follows: the steam at boiler pressure is passed through a small orifice into the atmosphere. When its pressure has fallen to that of the atmosphere its temperature is taken. If the steam is dry to commence with, its temperature will be above 212°, showing it to be superheated. If, however, there is contained water, this will first be evaporated, and any further heat available will superheat the steam.

For instance, supposing the boiler pressure to be 175 lb.:—

Total heat of 1 lb. steam at 190 lb. abs. = 1229 th. units.
,, ,, ,, 15 ,, ,, = 1179 th. units.
1229 − 1179 = 50 th. units available for superheating.

Assume specific heat of steam to be ·43. Then $\frac{50}{43}$ = 116° F. superheat.

Next assume that moisture amounts to 3 per cent.:—

We have then ·97 lb. steam + ·03 lb. water = 1 lb. of mixture.
Total heat of ·97 ,, ,, = 1192·1 th. units.
Heat of ·03 ,, water = 11·4 th. units.

Total = 1203·5

1203·5 − 1179 = 24·5 th. units available for (1) evaporating the contained water and (2) superheating the steam.

Heat required to evaporate ·03 lb. water at 212° from 377°
= ·03 (964·9 − (382·4 − 214·9) = 23·8 th. units.

This leaves only 24·5 − 23·8 = ·7 th. units for superheating $\frac{\cdot 7}{\cdot 43}$ = 1° superheat.

For 1 per cent. and 2 per cent. moisture, respectively, the corresponding superheat

the steam about 1 foot from the orifice, registered on a thermometer held in the hand, was 320°F., thus showing that the steam given off by the boiler was perfectly dry.

PRELIMINARY TEST OF CYLINDRICAL WATER-TUBE BOILER (CUMMINS' PATENT).

Conditions.—Lower drum not lagged, steam blown off at safety valve, cold feed, no superheater fitted.

Duration of trial	6 hours
Quality of fuel	unscreened Welsh
Class of firing	hand
Heating surface	774 square feet
Grate surface	23·7 square feet
Ratio	1 : 32
Steam pressure	175 lb.
Draught at base of funnel	0·6 inches
Temperature of feed	60° F.
Temperature of gases leaving boiler	597° F.
Temperature of steam leaving safety valve	320° F.
Corresponding superheat	108° F.
Fuel per hour	448 lb.
Fuel per square foot grate per hour	19 lb.
Fuel per square foot heating surface per hour	·58 lb.
Water per hour	3,948 lb.
Water evaporated per lb. fuel	8·81 lb.
Water evaporated per square foot heating surface	5·13 lb.
Water per lb. fuel from and at 212° F.	10·6 lb.
Water per square foot heating surface from and at 212° F.	6·2 lb.

During the trial the water-level was maintained absolutely constant by the Fleuss automatic feed regulator. This apparatus controls the steam working the boiler feed pump, and has been in use on the above boiler for six months, during which time neither the boiler check valve nor the feed pump steam valve have been touched.

DISCUSSION.

Mr. W. A. WOODESON, in opening the discussion, said—I was hardly prepared to be called upon to make any remarks this evening; in fact, I hardly see how I can open a discussion, because I practically agree with all the remarks Mr. Cummins has made.

I have had a fairly good experience with water-tube boilers, both of the vertical and horizontal tube type, and I can verify from several years' actual experience almost every remark Mr. Cummins has made about water-tube boilers.

Referring more particularly to vertical tubes being more efficient from a cleanliness point of view than horizontal tubes, on account of the lesser tendency for deposits to adhere, I can give you an experience that we have had at Messrs. Clarke, Chapman & Co.'s Victoria Works, Gateshead, with both types of boiler. There are at these works three water-tube boilers, working at a daily pressure of 250 to 300 lbs. per square inch. These three boilers are practically fixed side by side, two vertical tube boilers and one horizontal tube boiler. They are all fed from one main. Our water is taken from a reservoir which collects all the surface and refuse water of the works, and is very often of a very impure nature. We treat this water by a water-softening apparatus, which is fairly efficient. The vertical tube boilers are opened out only once in every three or four months and practically nothing is found inside the tubes at all, whereas to keep the horizontal tube boiler at all clean and fit for any work, four or five of the bottom rows of tubes have invariably to be cleaned out every third Sunday.

Regarding the vertical tubes giving out, we have only replaced one vertical tube during a period of three years' constant work with two boilers, and this tube was not dirty; a small foreign substance had got into it, no doubt, during the process of manufacture, and blew out, causing a hole in the tube about ¼ inch in diameter; and we have not spent any money on repairs to the boiler in any form during this same period. The horizontal boiler has been practically retubed and several tubes of the three bottom rows have been replaced more than twice

) be desired is to get as perfect combustion as possible and a)w temperature of funnel gases, and this can only be got by tting properly designed baffles.

What Mr. Cummins says about steam space is very important ıdeed, especially with water-tube boilers, and I think to make ny of these types of boilers satisfactory, from this point of iew, a separate steam-drum should always be fitted. We have ad experience in this respect at Victoria Works, Gateshead. Ve have two boilers at work without separate steam-domes and ·e have one at work with a large steam-dome fitted across the wo upper steam-drums, and the difference in the quality of the team is very marked indeed. There is no doubt that the steam rom the boilers without a separate steam-dome is not so dry as ·e would wish, whereas with the boiler with the separate steam-.ome the steam is as dry as it is possible to wish for without oing through a superheater.

As to the ease of cleaning the tubes, I scarcely agree with Ir. Cummins that a horizontal tube boiler can be examined and leaned as easily as a vertical tube boiler, as with any of the ·ell-known designs of horizontal type boilers it is absolutely ıecessary to take off a cap at the end of each tube to properly xamine and clean it, whereas with a well-designed vertical ube boiler it is only necessary to break one manhole door in he water-drum and one in the steam-drum and all the tubes ·an be examined and cleaned.

Regarding the evaporative efficiency per square foot of heat-ng surface between the horizontal and vertical tubes, my xperience is that, both sets of tubes in the same condition, amely, kept fairly clean and with the temperatures of the ·ed about equal, the difference is so small that it need not be ·oken of; but for ease of accessibility for examination, clean-ıg or repairs, for a minimum cost of upkeep, for increased ficiency on account of the self-cleaning tendency, both ternally and externally, then the well-designed straight tube rtical water-tube boiler must stand far ahead of any design horizontal water-tube boiler.

There are many other points regarding circulation and rmation of steam, etc., which Mr. Cummins has already dealt ith, and which, I think, requires no criticism, and I there-re will not raise any question regarding them.

Mr. Robert Baillie (of Messrs. The Stirling Boiler Co., Ltd., Glasgow), by permission of the President, said—Mr. Cummins deserves the thanks, not only of this Institution, but also of its kindred societies, for the excellently read and illustrated paper he has just given. In a paper of this class, however excellent, it can hardly be expected that Mr. Cummins can know everything about the boilers he has under review, not having had actual experience with them all, and so he has kindly put himself in communication with a number of his boiler brethren throughout the country, for which he has our thanks. Mr. Cummins classifies the vertical and horizontal types of boilers, without, when doing so, making any distinction between large and small tubes, and this, I think, is a vital point in making these comparisons. Mr. Cummins is right in saying that "mere volume of combustion chamber is not sufficient to get the best results," and he does not lose sight of the importance of maintaining high temperature in conjunction with this, but I do not think he has emphasised sufficiently the importance of the uniform mechanical feeding of the fuel, and if uniformity of steam production and pressure are expected, it is surely not unreasonable for the boiler furnace to have a uniform coal supply, and this particular point requires more consideration and serious thought from steam-producing engineers than has been hitherto given. Regarding the brickwork effect on combustion, I value and appreciate this as much as an invalid does his brick-lined fireplace. In land practice this has had a successful issue with

ward, as well as an upward direction, combined with low travel, all tend to make the most of the efficiency of the heating surface. Plate baffles for this purpose, if local to water tubes, have no special deterioration. We have a few years' experience of this with "Marine Stirling" boilers.

Mr. Cummins despises the small steam spaces of the ordinary forms of water-tube boilers compared with the "Haystack" boiler, which, by the way, is a vertical water-tube boiler, and which, according to the Board of Trade last year's returns, has less lives to account for than almost any form of boiler; but I am surprised to find that the high pressure of the present day water-tube boiler is not compared by him with that of the low pressure "Haystack" boiler, and if he were calculating out the comparative volume of steam required per stroke in the engine, he would find an ordinary, well-designed water-tube boiler not so far out for steam space after all; and the "Cummins" boiler is not the only boiler whose steam space can be amplified to suit required conditions, and in the "Cummins" boiler you must have a large drum to withdraw tubes. I do not agree with Mr. Cummins that his boiler has the least floor space.

One of the boilers Mr. Cummins mentions as being unsuitable, with its brickwork casings, for use on board ship, is the "Stirling" boiler This is by no means correct. We have "Stirling" boilers, heavy, medium and light, forced draught types, in successful use with well-designed steel plate casings, properly lagged, and where local to the furnaces, well protected by a firebrick lining, secured, but not in the usual way, to these casings. I may say that all this firebrick local to bars is of the ordinary quality, but 15 inches above the bars it is of a quality four times the non-conducting power of ordinary brick and only about one-third of the weight. This means that there is no excess weight being put into the combustion chamber with these bricks. I have brought a couple of firebricks down with me which float on water, and these firebricks are used in designing the casing. We dispose these firebricks beyond the reach of the ordinary fireirons, so that they cannot be damaged by the firemen.

With regard to the cleaning of tubes, I have already mentioned that a water turbine tool, such as I now show, costing, along with an armoured hose, about £10, will tackle any

tube not too much bent. "Crooked" is a word which some straight tube people use when they wish to ridicule a fair and square slight set at the end of a straight tube, and also at the same time direct attention from parts of their own design which are called "staggered" parts. I call that design crooked and their ways also.

In some boilers you require to cut out good tubes when replacing defective ones, and Mr. Cummins includes the "Stirling" boiler among these. This is a want of knowledge which he, I am sure, will allow me to mention. The longitudinal row of tubes shows more than a diameter space between each, so that the tube in the next row, being staggered, can be freely withdrawn without troubling any of its neighbours.

In the test of Mr. Cummins' boiler, with such an easy rate of working, only 19 lbs. of coal per square foot of fire grate, I would have expected at least 80 per cent. efficiency instead of only 73 per cent., and with a flue or chimney temperature of about 400° Fahr. instead of 597° Fahr., which is much too high, and this would have been higher still if hot feed had been used.

If you would just allow me to make another remark, I have brought one or two interesting tubes which have come all the way from India. Some of our boilers out there are badly choked by the scale shown in these samples. We asked the people there to mark certain tubes and allow them to go on till they were burned out. In their letter they said, "We are glad

special type—which had a surface something like that and it failed under the water test—it began to buckle. I do not say this one would, being conical and of small size, but when large it would either need to be made very thick or it would need staying, and it is a most awkward place to stay. Then if it was of large size the top of the drum would need to be hemispherical if it is made without stays. It would be difficult to put stays in there, too, because you would have to put them through the upper tube plate. Secondly, I should like to ask Mr. Cummins to explain how the baffle plate is got into place. Unless it is in very small pieces indeed it must have been built in.

Mr. Cummins—It is put in in two or three sections and is of cast-iron.

Professor Weighton—That is all I wish to ask.

Mr. Alfred Harrison said—I see in the paper Mr. Cummins says, "the gases going past the tubes are comparatively cold gases," but there is no heating surface about these boilers excepting the tubes, and if the gases are hot enough to seriously affect the tubes, I cannot see how it could be an ample protection to have only a 1-inch asbestos casing outside them. A 1-inch asbestos casing cannot stand the fierce heat that will certainly come from this furnace. I think it an excellent paper and gives useful data in a very compact form. The Hornsby boiler illustrated here, with its large and well-designed combustion chamber, its medium-sized, vertical, straight tubes, its separate steam-drum, etc., has all the advantages which are being claimed by Mr. Cummins as necessary to make a perfect water-tube boiler. In the Cummins boiler there would have to be a joint between the conical furnace plate and the lower tube plate, which, I think, will prove a serious trouble in actual working.

Mr. Cummins—It would be welded.

The President—The discussion will now stand adjourned until the next meeting on December 16th, and those gentlemen who have not been able to be present to-night will then have an opportunity of speaking on the subject.

The meeting then dissolved.

NORTH-EAST COAST INSTITUTION OF ENGINEERS AND SHIPBUILDERS.

TWENTY-FIRST SESSION, 1904-1905.

PROCEEDINGS.

THIRD GENERAL MEETING OF THE SESSION, HELD IN THE LECTURE THEATRE OF THE LITERARY AND PHILOSOPHICAL SOCIETY, WESTGATE ROAD, NEWCASTLE-UPON-TYNE, ON FRIDAY EVENING, DECEMBER 16TH, 1904.

W. H. DUGDALE, ESQ., VICE-PRESIDENT, IN THE CHAIR.

The VICE-PRESIDENT (Mr. W. H. Dugdale) said—I have to express Lord Armstrong's regret that, owing to his having to attend another meeting at Rothbury to-night, he is unable to be present.

The SECRETARY read the minutes of the previous meeting, held in Newcastle-upon-Tyne on Friday, November 25th, 1904, which were confirmed by the members present and signed by the Chairman.

The CHAIRMAN appointed Mr. W. G. Spence and Professor R. L. Weighton to examine the voting papers for new members, and the following gentlemen were declared elected:—

MEMBERS.

Champness, E. Coulter, Lloyd's Surveyor, Lloyd's Register of Shipping, Collingwood Street, Newcastle-upon-Tyne.

Foster, Herbert Symes, Electrical Engineer, Mather Street, Newcastle-upon-Tyne.

Pinkney, Edmund W. R., En ineer, 65, Fern Avenue, Newcastle-upon-Tyne.

Rea, Harry Ernest, Assistant Shipyard Manager, 10, Park Avenue, Whitley Bay, Northumberland.

The discussion on Mr. W. R. Cummins' paper on "A Comparison of Vertical and Horizontal Tubes in Water-tube Boilers" was resumed.

Paper on "The Launch of the U.S.A. Cruiser 'South Dakota'" by Mr. James Dickie.

ADJOURNED DISCUSSION ON MR. W. R. CUMMINS' PAPER ON "A COMPARISON OF VERTICAL AND HORIZONTAL TUBES IN WATER-TUBE BOILERS."

Mr. H. B. Buckland said—We must all thank Mr. Cummins for the very interesting paper he has given us, and I am very sorry indeed that the short experience I have had with water-tube boilers hardly enables me to go fully into the matter. It is a pity Mr. Cummins has not included amongst the designs given one of the Reed boilers, which I should think is one of the best of the express type.

Generally speaking, I cannot agree with the writer that a firebrick lining of furnaces and combustion chambers is beneficial to a boiler, more especially to one that is on board a ship, where one of the principal things to avoid is all loose or movable material, such as firebricks, and as they absorb a large amount of heat it will, of course, take so much longer to heat them, practically more than doubling the thickness of the plates through which the heat has to pass. Mr. Cummins says there is a great advantage in water-tube boilers owing to the surfaces being so much thinner, as it takes less time to pass the heat through thin plates, etc. On this point I hold, with Mr. Alex. Taylor and the late Mr. Kilvington, that the extra time it takes to pass heat through a $\frac{3}{4}$ inch plate instead of a $\frac{3}{8}$ inch one is not worth thinking about (see their paper read before this Institution, February 14th, 1890), and therefore I would not hesitate to put in furnaces 1 inch thick or more. The firebricks are also very bad for a boiler when cooling, as they often remain hot and cause unequal expansion, more especially in the way of a riveted seam.

Mr. Cummins is undoubtedly right that a large combustion chamber is a good thing, providing that you do not overdo it, as I rather think he has in the design of his own boiler, as he is thereby sacrificing a large amount of steam space to get a combustion chamber which, at the top, will be full of dead smoke.

I think he is right as to the vertical or nearly vertical tube

being better than the purely or nearly purely horizontal one, as the heat is more likely to attack the whole of the surface of the vertical tube.

Mr. Cummins talks a great deal about economy, but I do not see where it is coming in with water-tube boilers, where the first cost is practically the same, efficiency not much better, and the wear-and-tear certainly very much more, and consequently the life of the boiler so much shorter. I think that every water-tube boiler should have a casing of water outside the tubes, so as to do away with the firebrick or asbestos-lined casings, where there must be a great waste of not only heat but certainly of heating surface, and therefore Mr. Cummins' boiler would be a much better one if it had an outer coat of water. Supposing he sacrificed two rows of tubes at the outside, the plate surface he would get instead of it would be just as much or more effective. But this, again, would require staying; still, I think it would be better than the present design. I should not like to trust a welded joint between the furnace and tube plate, as Mr. Cummins shows it; a riveted one, countersunk on both sides, would be much more preferable.

Mr. Cummins, I think, has missed a very important item out of his paper, that is, the efficiency of the different boilers, so as to compare with his own, which I may here say is a very similar one in design to the "Convector" boiler patented by Mr. L. Mills some twenty or more years ago, and differs principally in the fact that in the "Convector" the smoke was carried to the top of the boiler by means of a centre tube, and several tubes

the Cummins boiler of 166. The Stanley coal was Davidson's West Hartley, and his was Welsh unscreened, and perhaps the very best at that, and at this heavy consumption it evaporated 9·14 lbs. of water per square foot of heating surface against the Cummins' 10·6, and Mr. Nichol deduced that at 15 lbs. per square foot of grate, the Stanley would evaporate 11·07, all from and at 212°. Mr. Cummins does not give the weight nor the sizes of his boiler from which the tests given were obtained. Perhaps he will give this, so that a comparison may be made. The weight of the Stanley boiler in question was 11½ tons, with water, and its evaporation per ton was 244 lbs. per hour.

The Buckland vertical boiler, made with an inverted fire-box inside the ordinary cross-tube box, evaporated from and at 212° 9·5 lbs. of water per lb. of coal—Stella unscreened furnace at that.

In my opinion a boiler, to be efficient and economical, must undoubtedly have all the surfaces (except the grate) that are exposed to the flames on one side, with water on the other, and until we get this we will never obtain the degree of either efficiency or economy that we ought.

Engineer-Lieut. E. F. Baker said—I think Mr. Cummins is entitled to success in his endeavours to raise a discussion on the merits of the different types of water-tube boilers, as there are several points in his paper which should raise protests from some water-tube boiler-makers.

In dealing with the combustion chamber question, Mr. Cummins describes the Lagrafel d'Allest boiler as the only one of the horizontal tube species with a good efficient combustion chamber; but referring to the sketches illustrating the paper, it appears to be no better off in this respect than the Durr and Niclausse, falling short even of the Belleville and very far short of the Babcock & Wilcox marine boiler.

In some Babcock & Wilcox boilers recently constructed, the space between the fire and the bottom row of tubes amounts to about 2·75 cubic feet per square foot grate, which compares very favourably with the combustion chamber space of many other boilers.

With reference to the space between the economiser and generator tubes in the Belleville boiler described as the com-

bustion chamber, the value of this space as a combustion chamber is doubtful. The economiser should be looked upon more as an appendage than an integral part of the boiler, whose function is to heat the feed water before it passes into the boiler proper. It performs another very useful function which may not be generally known, namely, as a grease extractor. On opening out an economiser after a couple of months' steaming, quite a considerable quantity of grease, mixed with lime, in the form of mud, is found under the zinc angle bars, introduced to prevent corrosion, which can be easily removed by a squee-gee. This function of the economiser may have something to do with the success of the later Belleville boilers, and as the presence of grease in a water-tube boiler is one of the most fruitful sources of trouble, this action of the economiser is well worth the consideration of water-tube boiler-makers.

As for the admission of air over the fires through fine jets, the Belleville boiler does not stand by itself in this respect, but this admission of additional air is more likely to be due to the size of the grate, resulting in an insufficiency in the supply through the bars, than the want of combustion chamber space.

Turning to the Cummins boiler, one is struck with the very considerable combustion chamber surface above the water-level which is exposed to the heat of the furnace gases, and it would be interesting to know if these plates have shown any signs of rapid deterioration, or have in any way suffered through overheating.

With regard to the circulation of water and the advantages

the element harder on to the nipple. This, in the case of the "Good Hope's" boilers, appeared to take place when the rate of combustion was somewhere between 7·5 and 10 lbs. per square foot of grate. Leaky nipples at lower rates of combustion would, as a rule, take up as soon as the rate of combustion was raised above 10 lbs. per square foot of grate.

There is another point worth considering, and that is the influence of circulation in preventing a deposit of scale on the heating surfaces. It appears to be generally accepted that the more rapid the circulation of the water over the heating surface the smaller is the chance of a deposit. In the case of the Cummins boiler, any tube can act either as an uptake or a downcomer, and consequently between the tubes in which there is a rapid upward flow and those in which the water is travelling downward, there may be some in which the circulation is very sluggish or changing alternately from an upward to a downward flow and *vice versa*.

Another matter which it would be interesting to know is whether any trouble has been experienced with overheating of the tubes, due to interference of steam bubbles passing up the tube, especially when the boiler is forced. With a slight inclination of the tubes the bubbles would pass up on the upper side of the tube, leaving the lower side continually covered with water. I believe the trouble with the "Polyphemus's" boilers was attributed to the difficulty of getting the steam bubbles away from the firebox sides, thus causing overheating of these plates.

Coming to the question of circulation of the gases among the tubes, Mr. Cummins is very severe in dealing with the Belleville, Niclausse, Durr and Babcock & Wilcox boilers. Although the baffles in the Belleville boiler are perforated, thus allowing a small portion of the gases to pass through the holes instead of between the baffles, the baffling on the whole is satisfactory. The baffling of the Babcock boilers, previously referred to, is shown in the following sketch (p. 62), and appears to give as tortuous a course to the gases as one could wish.

Turning to the baffling in the Cummins boiler, some information as to the materials used and mode of construction would be interesting, as the baffle appears to be called upon to withstand considerable punishing from the furnace gases; also any arrangements to facilitate its repair or renewal.

Dealing with the question of space economy, the space round the boiler necessary for the removal of casing doors and for cleaning appears to have been overlooked. Taking this into account, the Cummins boiler does not appear to excel much over that of other water-tube boilers.

Coming next to the consideration of cleaning the external surfaces, the Belleville boiler is found standing by itself as "peculiarly difficult to clean mechanically." This is rather severe on the boiler in question, especially as in the Navy it has been found about the easiest water-tube boiler to clean, the cleaning being effected by means of an air-jet with a pressure of from 20 to 30 lbs. per square inch. The lance used for this purpose consists usually of a piece of gas-pipe $\frac{5}{8}$ inch in

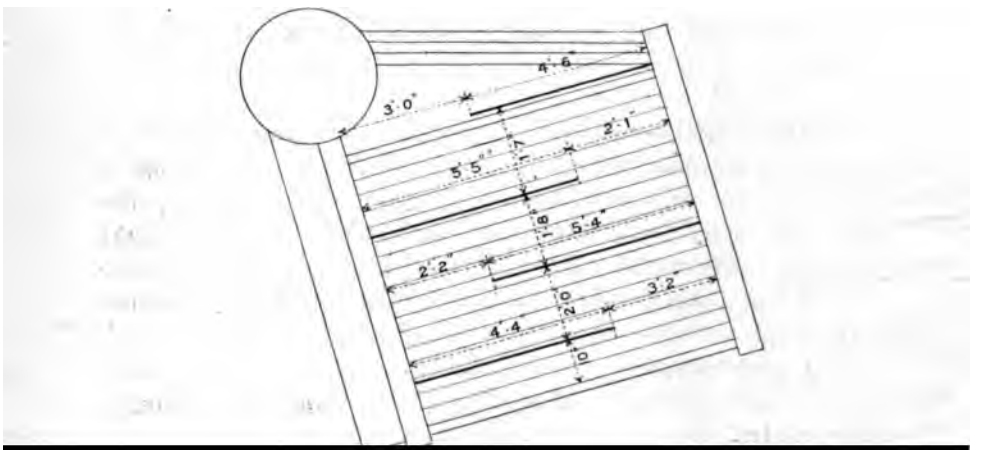

istance, the casings appear very exposed to the hot gases, and :condly, the description and number of doors would lead one) expect a loss of efficiency from the leakage of cold air through ie joints of the doors. Unfortunately, no details of the sliding ising doors are given, showing what precautions have been iken to ensure them closing air-tight, at the same time allow-ig of their easy opening or removal. In the Belleville boiler ie trouble has been to a large extent remedied in the case of ie side casings with the use of corrugated iron sheets between ie wing elements and the side casings, just above the brick-ork, thus preventing short-circuiting of the gases along the ising sides. When one of the plates is found to be burnt irough in any place along the bottom corrugation it is with-rawn and replaced upside down. A piece of stout iron wire, bout 6 feet long and bent up at one end, makes an excellent earcher to determine if the plate has been burnt through.

The question has also been raised as to the relative merits : large and small tubes. If I remember rightly, the trials of ie large and small tube Yarrow boilers showed a superior :onomy in the large tube boiler over the one with small tubes. f course it may be that a sacrifice in economy in the small tube oiler was made to effect a saving in weight, as the results are i opposition to the accepted theory on this question.

In conclusion, I should like to express my appreciation of Ir. Cummins' paper, which is calculated to further the progress i the design and construction of water-tube boilers by bringing ut in the discussion defects and suggestions to remedy them.

The most cursory glance through the paper and the diagrams llustrating it impresses one with the amount of work the reparation must have entailed.

Mr. Lewis Taylor said—Having been associated with the sign, construction and working of water-tube boilers for the it twenty years, I am naturally very interested in Mr. Cum-ins' valuable paper, embodying as it does, an expert review of e various designs in successful use.

Mr. Cummins has referred to the Hornsby boiler, so that the sults of a test recently carried out by the engineer of the nchley Power Station, London, may be of interest to the embers of this Institution in so far as they fulfil the conditions

laid down by Mr. Cummins as to fuel capital and upkeep. The boiler, tested in July this year, is one of three of the Hornsby type which have been working for some twelve months.

Duration of test, eight hours.
Coal, Nixon's Navigation.
Average gauge pressure, 160 lbs.
Average temperature of feed water, 91·73 deg. Fahr.
Coal burnt per square foot of grate, 18·63 lbs.
Water evaporated per hour, 7185·5 lbs.
Water evaporated per hour per lb. of coal from and at 11·257 lbs.
,, ,, ,, ,, combustible 12·18 ,,
Percentage of moisture in saturated steam, 1·2.
Boiler percentage of efficiency, 73·4.
Draught in inches of water at damper, ·42
Temperature of flue gases, 600 deg. F.

The engineer of the Finchley Power Station states that the boilers have at times considerably exceeded the specified evaporative capacity, also that up to the present time there has been no expenditure on repairs, and that no defects have been found after careful examination both externally and internally, although steam has been raised very rapidly from a cold boiler in case of emergency. He also states that the upright tubes are less liable to accumulate limey deposits from the water than boilers of the horizontal tube type, and that the upright tubes are easier to maintain, less expensive to clean and more satisfactory for land purposes than the horizontally inclined tube type.

The above tests and reports prove that this type of boiler

the gases, and it has been found quite recently by actual experiment that the baffle bricks on the tubes can be dispensed with and the efficiency of the boiler is not affected.

With reference to Mr. Cummins' statement that the majority of water-tube boilers have no expensive stayed flat surfaces, excepting the Niclausse, Durr and Hornsby, I presume Mr. Cummins does not intend to convey that the Hornsby upright boiler has any flat or stayed surfaces, but refers only to the old horizontal type, which is not now being manufactured at all.

With reference to Mr. Cummins' remarks about the removal of the tubes, I would remark in passing that, out of 50 boilers of the upright or "Nesdrum" type, it has not been found necessary to remove a single tube, but any tube in the boiler could be removed in a very short time if it should be found necessary at any time to do so.

It may also be of interest to you to know that the largest water-tube boiler in the world is now under steam at the Charing Cross and Strand Electric Company's Power Station, Bow. This boiler is one of the "Nesdrum" type (Hornsby's patent) and is capable of producing 100,000 pounds of steam per hour, and the results have been so satisfactory that the boiler is being practically duplicated.

Mr. H. L. Riseley said—I am afraid I am not like some other people—I have not an axe to grind, and no boiler to sell. I have to operate them, and I may give you some of my experiences.

Mr. Cummins' conditions affecting fuel economy I agree with. For land boilers weight and space economy does not matter so much. Really the most important item is the conditions affecting capital cost and economy. If you are buying a boiler it is an essential thing that you keep the capital cost down, because every year you have to write off so much depreciation, and the interest has to be paid on this at the same time. On page 33 Mr. Cummins says one of the chief sources of loss in burning fuel in a boiler is access of air. That is a difficult point to get over. My experience of water-tube boilers is not the same as that of the previous speaker. I go for the small tube. In the Babcock land type you have a larger tube than in the marine type. The difference between marine type

as against land type, in my experience, is as about 8 to 6 lbs. of water evaporated per lb. of coal.

As regards cleaning the tubes in this boiler, Mr. Cummins seems to have some doubt or difficulty. If you have fixed steam-jets at the sides of the tubes it is really not a very difficult matter, but there is no doubt the lance is more satisfactory than the fixed cleaning jets, only it is more troublesome to operate.

A previous speaker spoke about a boiler evaporating 100,000 lbs. of water per hour. It certainly seems an enormous boiler. The biggest water-tube boiler I have operated was to evaporate 30,000 lbs. of water per hour.*

As regards getting wet steam, in modern practice nearly everybody fixes a superheater, and why it has not been used in marine work I cannot understand, as all modern power houses fix on superheaters. There is no reason whatever why you should have any difficulty with superheaters. You can regulate them and just get what degree of superheat you want up to certain limits. In the Babcock marine boiler, if you want to increase the superheat, say, more than 150° F. at 200 lbs. pressure, you can get that, but probably you would be decreasing the efficiency of the boiler. It only means taking a few rows of bricks out of the arch, but you will get higher temperature in your flue gases.

The whole secret of efficiently operating the Babcock & Wilcox boiler is in the arch. There is no good starting to operate that boiler, commercially, until you have got that arch incandescent, and, at the same time, your dumping plate and

cannot afford to go and get best Welsh coal. You have to burn the cheapest you can get. Coal about 5s. a ton is what you can afford to burn commercially. Therefore the boiler that is going to give you the best efficiency with this coal is the boiler you ought to adopt.

The upkeep of the brickwork in the land type is a most difficult matter to attend to. It is a most expensive item. It is nearly impossible to keep it tight, and I think the success of the marine type boiler is due to the absence of brickwork. People complain about the arches falling away. They should last as long as a brick will. You just want to put the fireclay on the bricks in a kind of slur and wedge them up tight and the arch will stand till the bricks fuse, and you cannot expect them to last much longer than that. As regards the test in the paper, I think it is one of the most unsatisfactory tests in my experience. Mr. Cummins does not even state what the percentage CO_2 is in the flue gases. In addition to that he is using unscreened Welsh coal—good coal, I suppose—and he is only getting 8·81 water evaporated per pound of fuel, and this is on a test. The people here are doing that commercially. I do not understand one point; he says the temperature of the steam leaving the safety valve stands at 320° F., and the steam pressure 175 lbs., but as to the corresponding superheat, I do not know to what Mr. Cummins refers.

The previous speaker brought a question up to my mind as to grease in boilers. I thought we had all got over that trouble. It really seems rather amusing to use an economiser as a grease extractor. It is an open question whether you should put in an economiser to absorb heat which should be absorbed by the boiler. The most efficient boiler is one where the gases go out somewhere near the temperature of the steam at the back of the boiler.

Another very great help we find in operating boilers, as a guide to the fireman, seeing that in boilers, more than any other class of machinery, the human element comes in. In working boilers on three shifts the difference you get per different shift is something more than you can imagine. Careful stoking is most important. The only way of getting any check is to put in a CO_2 recorder at the back of every boiler and keep accurate results day by day, then you will see what you are doing.

Communications received by the Secretary:—

December 15*th*, 1904.

DEAR MR. DUCKITT,

In accordance with the invitation extended in the last paragraph of the paper, I submit a few observations, partly on the general subject, but more particularly as regards my experience with one of the boilers therein referred to, viz., the Babcock & Wilcox, with the manufacture and maintenance of which I have been associated for a considerable time.

With many of the writer's remarks I cordially agree, but would point out that his information concerning the Babcock boiler does not appear to be altogether up-to-date. The lithograph on Plate XVII. shows the latest practice and will be presently referred to.

With regard to the division of water-tube boilers into two classes, viz., those which have the tubes vertical and those which have the tubes horizontal, such a distinction is, to my mind, somewhat misleading. The Babcock boiler should not be classed as having horizontal tubes, as the tubes are arranged at an angle to the horizontal of 15 degrees, which inclination was, in the first place, determined as the result of a series of long-continued experiments, and which, in the more than 5,500,000 horsepower of boilers since constructed, has proved quite suitable to the many varied requirements of service for which the

ion chamber larger than is necessary, and it is claimed in the Babcock boiler sufficient allowance has been made his respect. Analyses of furnace gases taken from the of the chimney prove the combustion to be good, and the nce of smoke is generally very marked when compared with r types of water-tube boilers and with Scotch boilers.

'he second essential for perfect combustion is, as stated, ing surface efficiency, and in most water-tube boilers he express type it must be admitted that the path of the s among the tubes is very short, to which fact is to be buted the high temperatures often obtained in the chimneys ıch types. A good long travel is certainly advantageous in r to get the full effect from the heating surface, and to in such travel in the Babcock boiler the gases are com-ɜd to travel over the body of the tubes practically three ɜs. This is ensured by an arrangement of baffles as shown Plate XVII. The staggering of the Babcock tubes also lts in the gases being split up and brought into intimate act with all the tube surface.

As regards circulation, the author's reference to devices fitted ısers of horizontal tubes to prevent the formation of steam gs is scarcely correct as far as the Babcock boiler is con-ıed. He states that in the Babcock land type tubes are made arge diameter and in the marine type as short as possible, with additional inclination. As before mentioned, the nation of tubes in the Babcock boiler is 15 degrees, and in respect the land and marine types are identical. The tubes ıot made as short as possible to prevent the formation of n plugs, but the length is dependent upon the arrangement ıe boilers in the space at command in the ship.

n the latest practice 3¼ inch tubes are generally adopted he mercantile marine, or where the weight has not to be down to the lowest possible amount per unit of heating ace. This requirement, however, prevails in the latest war s for which Babcock & Wilcox boilers are ordered, and these been made with 4 inch tubes in the two lower rows, and nch tubes in the upper part of the sections. The main on for the large tubes at the bottom is that these require e frequent cleaning than the rest of the tubes, and, of course, larger tube is easier to clean.

A somewhat similar practice is now being generally followed in boilers that have so-called vertical tubes, possibly for a similar reason.

As regards the relative advantages of inclined tubes and vertical tubes for perfect circulation, it is evident that although the upper ends of vertical tubes may be drowned, the momentum of the steam and water rising through them must cause a great deal of commotion on the water-line, and therefore conduce to wet steam, and this fact may be responsible for the author's statement that the steam space given to most water-tube boilers is ridiculously small, and that the whole class has a bad name for wet steam.

I must take exception to the Babcock boiler being placed in such a class, and also to the author's contention that the inevitable result of reducing the steam space is to get wet steam. Dry steam depends not so much on the actual cubic contents of the steam space as on the design of the boilers and the arrangements made for promoting a continuous and definite circulation. In the Babcock boiler the circulation is continuous and practically in one direction, and it is found, within certain limits, that the harder a boiler is worked, and therefore the speed of the circulation increased, the dryer the steam becomes.

Plate XVIII. represents the diagrammatic construction of the most recent type of Babcock marine boiler, the dot and dash lines showing the water circulation and the dotted line the path of the steam.

ıbes should be straight and that their ends should be ex-
ınded into tube seats. No type of screwing or system of
ınes should be admitted, both on the score of first cost and
ıe extra care involved as regards keeping spares and making
newals when necessary. Any such system is, in my opinion,
ıtirely unsuitable for the usage generally obtaining on board
ıip.

I cannot agree with the opinion that, as regards actual
eaning and examination, there is not much to choose between
e vertical and horizontal type boilers, unless the Babcock be
cepted. A great drawback to boilers of the Cummins type,
ıd many other types now in use, lies in the fact that to renew
tube, or even to expand leaky tube ends, it is necessary to go
side the steam and water spaces. In the Cummins boiler
veral hours would elapse before a man could venture inside,
hich lost time might be ill-spared in case of an emergency.
he same remark also applies to many other types—you have to
llow time for the boiler to cool down in order that a man may
e able to work inside.

In the Babcock boiler the expanding of a leaky tube end
the renewal of a tube may be carried out without entering
e boiler at all, in a very short time, and working in the com-
rative coolness of a stokehold.

I would, ordinarily, not criticise a competitor's boiler, but
the paper has been written for the purpose of ventilating the
rits and demerits of various types, it may not be amiss that
hould state what appear to me to be defects in the Cummins
ler.

With regard to economy in space occupied, it is difficult to
how the Cummins boiler can successfully compete with the
bcock, since the furnace of the former is circular and there-
e the firegrate, which can be obtained in a certain given
gth and breadth, is only a little over three-fourths of that
ich can be obtained in a boiler of the latter type.

For very high pressures, too, the Cummins boiler would seem
be unsuitable, on account of the large diameter of the shell
essitating the use of thick and heavy plates, with their attend-
disadvantages. For heavy pressures the plates forming the
ıical furnace would have to be of considerable thickness,
ıich again is objectionable so close to the fierce heat of the

furnace. I fear that in a boiler constructed for high pressures, and in which the combustion would be at a high rate, great trouble would be experienced at the furnace throat, particularly in the neighbourhood of the opening between the baffle ends.

The purpose served by the combustion chamber above the level of the top tube plate I fail to understand, as, in my opinion, the gases there gathering would remain stagnant and not assist in any way in promoting combustion.

Much is said in the paper about the wetness of steam produced by water-tube boilers, and the worst character in this respect is given to boilers of the so-called horizontal tube type.

From the author's remarks on boiler trials it would appear that his experience has not been very extensive, otherwise he would be aware that where manufacturers of repute carry out trials they take care to determine the quality of steam before publishing results.

The results in the table of tests given in the Appendix do not appear to be particularly satisfactory. One would expect, if the heating surface were reasonably efficient, to find a temperature of gases leaving the boiler of less than 597° F. when burning only about 19 pounds of coal per square foot of grate per hour. The water per pound of coal evaporated from and at 212° F. is by no means high, and unless the Cummins boiler can be made capable of a better performance, it will hardly conform to the requirements of perfect combustion and high efficiency of heating surface.

Whatever may be said about the relative advantages of

Having had some experience in the working of water-tube boilers of the express type, I would like to offer a few remarks.

First, there is one slight correction that should be made. In the diagrams accompanying the paper Mr. Cummins shows the old speedy type of Thornycroft boiler, and in his paper he says: "In many of the express boilers, such as the Yarrow and the Thornycroft, no attempt is made to introduce baffle plates among the tubes." This is true of the Yarrow boiler but the Daring type of Thornycroft—the type made for about the last ten years—has walls of tubes arranged so as to greatly lengthen the path of the gases among the tubes. I cannot give accurate data, but I think it will be conceded by anyone with experience of express boilers that the Thornycroft is the most economical in coal consumption. When making passages together, destroyers with Thornycroft boilers always show a smaller coal consumption, in my experience, than those with Reed or Normand boilers. I think the Thornycroft boiler is also less liable to flame at the funnels—a very important point in destroyer and torpedo boat work at night.

One objection to straight tubes is that they cannot be arranged in walls to form baffles, and therefore unless baffle plates are used, which burn away quickly, they cannot be as economical as curved tubes. Straight tubes may be a *sine qua non* for large tube boilers, but for express boilers there is not so much to choose between straight and curved. Straight tubes can be cleaned better internally, as the wire-rope searcher can be turned round and scour all round the tube, but for internal examination they are practically no better. You cannot see much beyond a distance of six or seven inches along an inch tube. As to cleaning the outside of the tubes, there is hardly any difference; you can get a brush in among curved tubes as well as among straight, and I think the steam-jet and the fans running hard the only way of getting the soot out of many parts of a water-tube boiler. As to durability, there is not a very great difference. Probably straight tubes have a slightly longer life, but I have seen Thornycroft boilers go for more than six years without retubing.

With regard to vertical or horizontal tubes, it seems self-evident that vertical tubes must be much better for circulation. A larger space over the fire for combustion seems generally to be obtained with them. The Blechynden, Yarrow and Thorny-

croft boilers are all very good in this respect. The Reed and Normand, whose tubes are bent down closer to the fire, make much more smoke.

I do not think Mr. Cummins does the express type of boiler justice in regard to dryness of steam. Their steam space is very much larger in proportion than the Belleville or Babcock & Wilcox, and I think they give as dry or drier steam than the ordinary cylindrical boiler as long as the limit of density is not exceeded.

Rolling is far the best method of securing the tubes, I should say. If the tubes are rolled tight at first the joints will usually remain tight for the life of the tubes.

As to brickwork, I have found with Thornycroft and Yarrow boilers that, when it is well built, it will last five or six months with only small repairs; cleaning fires does the most damage to it.

In conclusion, I may say that, from what I have seen of the small tube type, I think the large tube Yarrow boiler will be economical in maintenance, and something of that type will probably be the marine boiler of the future.

Yours faithfully,

G. C. NICOLSON.

BEDE VILLA, RAVENSBOURNE PARK,
CATFORD, S.E.
December 16*th*, 1904.

DEAR MR. DUCKITT,

[redacted]

nust be horizontal. Again, in the convection of heat by water . vertical course gives the greatest rapidity, hence it is the ompromise between these, so as to obtain a maximum of both, hich determines the exact inclination of the tube.

It is very apparent that it is the conflict as to how much hould be given to each of these opposite conditions which has aused the tubes in some boilers to be one way and some the ther.

In speaking of the desideratum of the combustion chamber, most important point is to have it so arranged that it is not *cul de sac.* The products of combustion do not go ferreting nto all sorts of out-of-the-way corners merely for the sake of xploration, but take the most direct exit, therefore I cannot gree with the author that its position in the Cummins boiler s well chosen.

I should like to ask Mr. Cummins whether any experiments ave been carried out to ascertain what the circulation is e in this particular boiler. Assuming the feed water is de- ered in the lower water space, if the circulation in all the tubes upwards, the evaporation will represent the amount of circu- ion. But if the circulation in some is upwards and others nwards, will there not be a sort of neutral zone, causing a dency to stagnation in several of the tubes? If this is so, s it not point to the desirability of omitting a row, so that a ided break is made between the upward and downward flow? ust I have made myself clear on this.

In conclusion, I wish to express my indebtedness to Mr. mmins for his paper, and I hope the members will show ir appreciation of his efforts by joining in the discussion.

Yours faithfully,

A. E. SHARP.

The VICE-PRESIDENT (Mr. W. H. Dugdale) said—The dis- sion will now be closed, and Mr. Cummins will reply at next eting. In case Mr. Cummins is unable to attend next meet- , I think we ought to pass a very hearty vote of thanks to m for the very excellent paper which he has given to us, and e discussion it has evoked.

The proposal was carried by acclamation.

LAUNCH OF THE U.S.A. CRUISER "SOUTH DAKOTA," AT THE UNION IRON WORKS, SAN FRANCISCO.

By JAMES DICKIE, Member.

[Read in Newcastle-upon-Tyne, on December 16th, 1904.]

Principal Dimensions.—Length on load water line, 502 feet; breadth, extreme, at load water line, 69 feet 6½ inches; trial displacement, about 13,400 tons (see Plate G).

Main Battery.—Four 8-inch breech-loading rifles of 45 calibres in length; fourteen 6-inch breech-loading R.F. rifles of 50 calibres in length.

Secondary Battery.—Eighteen 3-inch (14-pounders) R.F. guns of 50 calibres in length; twelve 3-pounder semi-automatic guns; four 1-pounder heavy automatic guns; four 1-pounder heavy R.F. guns; two 3-inch field pieces; two machine guns, 0·30 calibre; six automatic guns, 0·30 calibre; two submerged torpedo tubes.

The launch of a vessel is always interesting, and especially so to those directly concerned in the shipbuilding business. As nearly all the members of this Institution are so concerned, a description of the details might prove of interest, and promote discussion which would result in benefit to all. Before proceeding to describe the launch, a brief description of the slip on which the vessel was built may be of interest.

The Building Slip.

The entire ground on which the shipbuilding slips of the Union Iron Works have since been built was a mud flat, dry at low tide and covered with from 2 to 5 feet of water at high tide. Liquid mud was pumped into this space, after a bulkhead had been built around it, until the surface was about 2 feet above high-water level.

The building slips were piled, capped and planked, as the increasing business demanded. Six of these slips are now in

operation, five of which have overhead cranes on them, a view of which is given in Plate XIX., showing a general view of the slip with the "South Dakota" inside, and another similar slip in the background, from which the cruiser "California," a sister ship, was launched a little over two months previously. A plan of the piling is shown in Plate XX.

The piles range from 35 feet in length at the upper end, where they touch hard pan, to 75 feet at the lower end, where they do not all touch bottom. They are of Oregon pine, 15 to 18 inches in diameter at the butt and 7 to 10 inches at the small end. In driving them they will drop with their own weight from 15 to 25 feet, gradually getting firmer as they go down, until at the last few blows of a 3,000 pound hammer with a fall of 20 feet, the pile will move only from 1½ to 3 inches, the diameter of the pile apparently tending more to retard it than the length. These piles will safely sustain a load of 30 tons each.

The capping is 12 inch by 12 inch Oregon pine, and the joists 4 inches by 12 inches, spaced about 24 inch centres, except under the keel and launching ways, where they are spaced about 6 inches apart, leaving an air space of about 2 inches between: this is done rather than use solid timber, because a circulation of air between the pieces prevents dry rot. The whole is covered with planking, 4 inches thick, which makes a nice working floor, always clean and dry.

The entire yard is 5 feet above high-water level to within a distance of 180 feet of the lower end, where it slopes at an

or concave, as this determines the height of the vessel forward while building. The writer has launched vessels with inclinations ranging from 1 in 27 for large ships to 1 in 14 for small ones, and has never had one that required to be started and only three small vessels that went slowly for the first 30 or 50 feet, owing to too much surface or too hard lubricant, either or both of which conditions will have this effect.

The keel of the "South Dakota" was 12 feet 6½ inches above the ground at frame 10 (the knuckle), and 3 feet 6 inches above the ground at frame 108 (the closest place), which gave the keel an angle of about 1 in 27½, or about $\frac{7}{16}$ inch to the foot. We use the ordinary blocking under the launch ways up to a height of about 6 feet, above that we use "A" frames, as shown on the sections at frames 18, 19, 25 and 31 (see Plates XXI., XXII., XXIII. and XXIV.). The keel blocks are made about 2 feet 6 inches long on top, and the splitting out pieces are ordered special of 10 inches by 12 inches clear straight-grained timber without heart. Every block that has to be removed is made of this kind of material, which makes easy work in launching. In placing all the other blocks and shores the space for the ways is always left clear and no blocks or shores, other than the keel blocks, are put inside the launch ways. (Plates XXV., XXVI. and XXVII. show sections at frames 62-106 and 110.)

Preliminary Calculations.

Launching curves (Plate XXVIII.) are prepared to determine the extreme pressure on the bottom at the after end of the ways, the dip of the stern before lifting begins to insure having sufficient water, and the weight on the forward poppets. In the case of the "South Dakota," it was determined to lay the ground ways with a camber of 11 inches in 300 feet, which, with a depth of water on the end of the ways of 6 feet 1 inch, gave a maximum pressure of 7¼ tons per square foot on the bottom of the vessel when she had travelled 290 feet, and when the stern from the centre of the rudder pintles was 194 feet beyond the end of the ground ways.

The maximum pressure on the fore poppets when the stern began to lift, which was when she had travelled 375 feet, was

1,635 tons, reducing to 1,033 tons when the fore poppet had reached the end of the ground ways. While 1,635 tons was the pressure on the fore poppets and theoretically on the extreme fore end of the sliding ways, it was actually spread over quite a length by the use of crushing pieces, which are shown on Plates XXI., XXII., XXIII. and XXIV. The distribution of crush is shown by the sketch on Plate XXVIII.

Experiments were made to determine the crushing strength of Oregon pine, first, with the grain of the wood at an angle of about 45 degrees, which gave way suddenly under a pressure of 747 pounds per square inch, shearing along the grain; secondly, with the grain of the wood vertical, which crushed steadily until a pressure of 1,428 pounds per square inch was applied, when it gave way and broke all to pieces; thirdly, with the grain of the wood horizontal, which crushed steadily until 2,390 pounds per square inch was applied. It was then down to about one-eighth of its original height but still intact; the load was then removed and it expanded to five-eighths of its original thickness. Consequently we put the grain of all crushing pieces horizontally, as that gave a steady crush without sudden fracture. We assumed the ultimate load that Oregon pine will bear at one ton per square inch, and determined the size of crushing pieces required to be as follows. All were made of a uniform height of 8 inches by 36 inches in length, and 4, 4, 5, 6, 7, 8, 9, 10, 11 and 12 inches in width; the small pieces being forward: —

Square Ultimate Resistance

the fore poppets distributed over the entire lot, which spreads the weight on the ways a distance of over 30 feet. The writer has been using these crushing pieces for eleven years and attributes the almost entire absence of smoke in launching to their use.

The Ground Ways.

The declivity of the ground ways was as follows:—At the fore end of the cradle, 1 in 46½ (¼ inch per foot); at the centre of the cradle, 1 in 27½ ($\frac{7}{16}$ inch per foot); at the after end of the cradle, 1 in 19 (⅝ inch per foot); at the extreme end of the ground ways, 1 in 15½ ($\frac{13}{16}$ inch per foot). The ways were double, laid as an arc of a circle, in pieces about 60 feet long and 18 inches wide by 10 inches thick, of clear Oregon pine without heart, to prevent warping. When cut out of large trees without heart they will keep for years without checking or warping. The pieces were joined at the ends by overlapping 8 inches, and were fastened with two ¾ inch bolts. Instead of securing both pieces forming the double ways close together to make the 36 inches required in width, they were placed 11 inches apart, the only connection being cross bolts with short distance pieces about 30 feet apart.

The abutments, of iron bark, for the dog-shore were secured between the double ways by through bolts and plates to prevent sliding (see Plate XXIX.). Having the ways separated made the dog-shore easily secured between them, spread the bearing of the packing a little more on the frames, and saved the labour of having the upper surfaces exactly even with one another. The butts of the pieces forming the inner way were approximately opposite the centres of the pieces forming the outer way. The blocking under the ways was spaced about 6 feet centres for about two-thirds of the length of the cradle from the upper end, and about 3 feet centres at the lower end of the cradle and on down to the end, this being where the weight of the fore poppets comes.

No blocks are "fitted" to the under side of the ways, they being made up of thin pieces of board and shingles. This is a cheap way to make them up and it is also the best way, as the blocking then forms a nice soft cushion. It is absolutely

impossible to lay ways perfectly true, especially when laid with a camber, but all inaccuracies are nicely taken up by the soft packing underneath. An examination of the ways after a launch shows how nicely this is done, as there are no spots with the grease all off and others with it on—the surface is even. The ways are laid level transversely, and no side shores are used except to correct any little irregularity in the timber. Under water the ways are bolted down to the caps with screw bolts about 30 feet apart.

The Sliding Way.

The sliding way is in pieces about 50 feet in length, 18 inches wide by 8 inches thick, double (after pieces 10 inches by 18 inches), with the butts of the inner and outer ways opposite each other. The pieces at the upper end are connected together longitudinally with plate straps, well bolted, and at the lower end with rope lashings. The inner and outer ways are connected transversely with a bolt at each end and one in the middle, passing through distance pieces, as in the ground ways. The ribband is on the inside way, projecting down 2½ inches, and is well fastened to the sliding way. There is no ribband on the outer way.

The packing is fitted to the bottom transversely under every frame, with a packing wedge under each piece. At the ends where the height is too great for solid packing, vertical pieces are used, similar to the poppets. Where the bottom of the

Inside Shoring.

No shoring is ordinarily used inside vessels, but in the cases of the "California" and "South Dakota," where the ship's longitudinal came on the edge of the ways, it was found necessary to clamp vertical pieces on each side of the floors to keep them from crimping where the greatest pressure came on the bottom at the lower end of the ways. These pieces were fitted throughout the boiler rooms; beyond that, both forward and aft, the packing on top of the ways was deep enough to transmit all the pressure to the longitudinal. As the crushing pieces forward distribute the pressure on the fore poppets over quite a number of frames, we have found that with timber bearing against the plating, interior shoring is entirely unnecessary.

The Lubricant.

For a lubricant, the writer has never used anything but tallow and soft soap and has implicit faith in it. If the launching weight is more than 2 tons per square foot of sliding surface, stearine is mixed with the tallow in the following proportions: —

2 to 2¼	tons per square foot,	tallow with	15 %	of stearine.	
2¼ ,, 2½	,,	,,	,,	25 %	,,
2½ ,, 2¾	,,	,,	,,	35 %	,,
2¾ ,, 3	,,	,,	,,	45 %	,,
3 ,, 3¼	,,	,,	,,	55 %	,,

These mixtures are varied a little according to the temperature. In all cases soft soap is used on top of the tallow or tallow and stearine. For the "California" and "South Dakota," tallow with 40 per cent. of stearine was used.

The first coat of tallow, which was applied on the day previous to the launch, was put on pure; the second and third coats were mixed with 40 per cent. of stearine. This gave a coating about a scant one-sixteenth of an inch in thickness. Care is taken to have a smooth surface on the tallow and to have the thickness as nearly uniform as possible. No care is taken with the soft soap, as any surplus that there may be squeezes out.

As the "South Dakota" was launched in the evening, the soap was applied on the morning of the launching day and the

sliding way then canted in. This last operation was accomplished in forty-two minutes. As the sliding ways are in small pieces, they are easily canted in and dragged to their places, and the packing is also easily handled, being in small pieces. The poppets, however, are not removed with the sliding ways, but are held up in place when the sliding way is removed by a shore at their outer ends.

Releasing the Vessel.

For releasing the vessel, a dog-shore is used on each side, of iron bark shod with iron on the ends, 5 feet 6 inches long and 9 inches by 10 inches in section. The after end is cut at an angle of 1 in 5 and is supported by a trip-shore of iron bark, 6 inches by 9 inches in section, which sets on a block shod with iron on top and greased. This trip-shore receives a blow from a trolley of about 300 pounds weight which runs down an inclined track, hitting the shore at the bottom. The trolley is held at the upper end of the incline until the time to let go by a trigger, which is controlled by a wire rope having a piece of cotton cord at its upper end, which is lead over a lignum vitæ block on the launching platform. A knife is suspended over this block, held up by an electro-magnet. The knife is released from the magnet by pressing a button (see Plate XXIX. and, for view of the guillotine, see Plate XXXII.).

Removing the Cradle.

For removing the cradle, a 7 inch hawser is made fast to the

chains were lashed to ground chains by rope stops, 6 feet long and about 8 feet apart, and the forward chain was fastened to an anchor buried at the after end of the ground ways. The after chain was free after the rope stops were broken (see Plate XXIX.).

The stops were composed of five round turns of 3 inch manilla rope, having a breaking strength of 3 tons each, which gave a breaking strength of 30 tons for each stop. As there were 36 stops on each side, there was a total resistance of 2,160 tons applied in breaking the stops.

In addition to the rope stops, the anchors offered some resistance, being dragged 34 feet, and the vessel ran into a mud bank for a distance of 150 feet.

Launching Velocity.

The launching velocity was taken by a chronograph, which worked very nicely (see Plate XXXIII.), and a view of the record taken by it is shown in Plate XXXIV. The highest recorded speed for the "South Dakota" was 11·36 knots per hour, while the "California," under almost identical conditions except the temperature, showed a maximum velocity of 13·6 knots per hour.

The Launch.

It is our custom to divide the launch proper into four operations, a programme being made out showing the time allowed for each, and an interval between for rest and reorganization. It thus enables the launch to take place within a minute or two of the time set, without holding the vessel when everything is out. The writer has always been *within* a few minutes of the time set, except on one merchant vessel of 413 feet in length, which was launched at night. The electric lights were on the outside of the ways and cast a dark shadow on the keel blocks. This caused the men to take more time than usual and she was eleven minutes late. The newspapers, commenting on the delay, said that such an occurrence was unheard of in the Union Iron Works and that there must have been some hitch. Since that time, when launching at night, we have used incandescent lights strung down the inside of the ways, and can do as well

at night as by daylight. The programme outlined for the "South Dakota" was as follows:—

		Probable Finish.	Actual Finish.
Start to ram up (two rams each side)	4.19	4.48	4.44
Start all shores	4.56	5.14	5.07
Start 1st, half keel and all bilge blocks ...	5.29	5.58	5.58
Start 2nd, half keel and all docking keel blocks	6.10	6.40	6.39
Let go (one minute ahead of time)			6.39

Seventy-four carpenters and twenty-three labourers were employed ashore, and nine riggers, three machinists, and twelve iron workers were on board—a total of one hundred and twenty-one men.

The vessel was christened in the usual manner, the bottle being suspended from the bow by a ribband. We have on several occasions used an electric device for breaking the bottle, where the lady that launched the vessel sat at one end of the table which held the guillotine, and the lady that christened it sat at the other and broke the bottle by touching a button.

When the blocking is all clear under the vessel and the temporary stop for blocking the trolley is removed, an electric bell, operated from under the vessel, gives the signal that all is clear, and a card is dropped on the guillotine frame bearing the word "ready." The lady who is to launch the ship then presses the button that drops the blade of the guillotine and cuts the cord holding the trolley, which, when released, knocks out the trip-shore. The after end of the dog-shore is cut at an angle of 1 in 5 and it falls out instantly upon the trip-shore being removed, and the vessel starts

ing prepared for launching. This makes the cost of the rger vessels greater in proportion than that of the smaller es, as the latter can usually be launched without purchas- g new material, by using that already charged to some larger ip.

The cost of labour for the "South Dakota" was as follows:—

Preparing for the Launch—		
Carpenters and labourers	$2081·62	
Iron workers	203·73	
Riggers	212·95	
Total cost up to launch day	$2498·30	$2498·30
Launch Day—		
Carpenters and labourers on launch	444·30	
Riggers and iron workers on board	60·87	
Total cost on launch day	505·17	505·17
After the Launch—		
Cost of hauling the vessel alongside the wharf and clearing up the yard after the launch—		
Carpenters and labourers	$339·95	
Riggers	138·26	
Total cost after the launch	478·21	478·21
tal cost of labour from starting to lay the ways until the vessel was moored and the yard cleared up		$3,481·68

The cost of new material charged to the "South Dakota" $1,612, which makes the total cost of launching $5,093·68. launching weight, including the cradle, being 6,190 tons, cost per ton for labour and material is 82¼ cents; and the of labour alone per ton is about 56¼ cents.

We have launched large vessels where the cost of labour as low as 48 cents per ton of weight, and some as high as 85 ts, according to the location of the ways. Of course in Great tain the labour would be much less, as here the common ourer is paid from $2 to $2·25 per day, and carpenters from ·25 to $3·75.

Launching Data.

The thanks of the writer are due to Mr. Everett P. Lesley, ho designed and built the chronograph and took the velocity ith it; to Mr. Le Roy E. Caverly, who made all the launching lculations; to the Naval Constructor in charge, who had the

drawings of the launch ways made by his draughtsmen; and to Mr. W. W. Hanscom, our chief electrician, who designed and made the launching guillotine.

There is appended a table of launching data, taken from the writer's note book, of vessels that have been launched from time to time at the Union Iron Works, arranged according to the launching weight (see Appendix I., page 90).

Launching Data.

July 21, 1904.

Times:—

	Started.	Finished.
Started to cant in sliding ways	7.00 a.m.	7.42 a.m.
All packing in place		11.30 a.m.
Split out 11 blocks each side, total 22 ...		1·00 p.m.
These were taken out to give room to ram up.		
Started to ram up	4.19 p.m.	4.44 p.m.
Started all shores	4.56 p.m.	5.07 p.m.
Started 1st half keel and all bilge blocks ...	5.29 p.m.	5.58 p.m.
Started 2nd half keel and all docking keel blocks	6.10 p.m.	6.39 p.m.
Let go (one minute ahead of time)		6.39 p.m

Men employed:—

Carpenters	70
Carpenter apprentices	4
Labourers	23
Riggers (on board)	9
Machinists	3
Iron workers	12
Total ...	121

Two rams were used on each side, total four.

Particulars of Launch Ways:—

Length of ground ways, fore poppet to after end ... ... 505 ft.

[redacted]

Height of base line (outside of keel) above water at centre of rudder pintles	2 ft. 7 ins.
Inclination of ground ways at fore poppet	1 in 46½
Inclination of ground ways at centre of cradle	1 in 27
Inclination of ground ways at after poppet	1 in 19¼
Inclination of ground ways at extreme after end	1 in 15½
Camber of ground ways	11 ins. in 300 ft
Depth of water on end of ways	6 ft. 1 in.
Height of tide on launch day (above mean low water)	5·6 ft.
Crushing pieces under fore poppets, all 8 inches high, first 2, 4 inches wide increasing 1 inch on each.	
Width of all packing wedges	12 ins.
Length of dog-shore (iron bark)	5 ft. 6 ins.
Section of dog-shore	9 ins. × 10 ins.
Section of trip-shore (iron bark)	6 ins. × 9 ins.
Angle on end of dog-shore	1 in 5
Pressure on dog-shore, neglecting friction	224 tons
Estimated weight of cradle	82 tons
Book weight: hull 11,794,354 lb., machinery 1,406,951 lb.	5893·44 tons
Dunnage on board ship	107 tons
Draft, forward 11 feet 1¾ inches, aft 13 feet 11½ inches, mean	12 ft. 6½ ins.
Displacement	6,108 tons
Total launching weight, including cradle	6,190 tons
Lubricant used: tallow, 1,150 lb., stearine, 420 lb., soft soap, 750 lb.	2,320 lb.
Number of keel blocks while building	108
Number of blocks under bottom while building (11 × 2)	22
Number of blocks under docking keel (12 × 2)	24
Number of bilge blocks (8 × 2)	16
Number of shores (31 × 2)	62
Total number of blocks and shores while building	232
Average weight on each block and shore while building	26 tons
Number of packing wedges on sliding ways (93 × 2)	186
Average weight on each packing wedge	32 tons
Number of strapped poppets, forward 6, aft 9	15
Number of stopping chains	4
Numbers of anchors	2
Length of free chain	270 ft.
Length of anchor chains	390 ft.
Distance, stopping plate from forward perp., anchor chain	173 ft.
Distance, stopping plate from forward perp., free chain	237 ft.
Number of rope stops (18 on each chain)	72
Stops of five round turns of 3 inches manilla, to break	30 tons.
Total to break all stops	2,160 tons.
Distance between stops	8 ft.
Length of stops	6 ft.
Distance anchors dragged	34 ft.

(In addition to the resistance offered by the rope stops and the anchors, the vessel ran into a mud bank for 150 feet. There was 5 feet 6 inches of water on the bank and the ship plowed 8 feet 6 inches into the mud for a distance of 150 feet).

Velocity Observations:—

Time elapsed from start to maximum speed 35½

Distance travelled to maximum speed 31

Total time elapsed from start to finish 75

Total distance travelled 78

Maximum velocity attained, 19·2 feet per second 11·36 knots per

The vessel started promptly and travelled nicely.

The crushing pieces worked well, crushing 7⅛ inches at the for end and 2 inches at the centre (25 feet from the forward end). A 3½ rope was used to hold up the after end of the cradle and a knife fitte the ship's side to cut it when the cradle started to move forward. rope was cut when the cradle was 184 feet over the end of the gr ways: it kept the sliding ways out of the mud. A 7-inch hawser was on the forward end of the sliding ways which brought everything ou

LAUNCHING VELOCITIES.

(From Chronograph Records).

No. of Seconds from Start. Seconds.	Distance Travelled during Second. Feet.	Total Distance Travelled. Feet.	No. of Seconds from Start. Seconds.	Distance Travelled during Second. Feet.
1	·21	·21	39	18·56
2	·34	·55	40	18·05
3	·70	1·25	41	17·85
4	1·07	2·32	42	17·62
5	1·38	3·70	43	17·40
6	1·82	5·52	44	17·04
7	2·23	7·75	45	16·73
8	2·69	10·44	46	16·49
9	2·98	13·42	47	16·27
10	3·44	16·86	48	16·07
11	3·80	20·66	49	16·88
12	4·19	24·85	50	15·65
13	4·55	29·40	51	15·05
14	4·93	34·33	52	14·66
15	5·42	39·75	53	13·95
16	5·94	45·69	54	13·64
17	6·62	52·31	55	13·11

U.S.S. "Marietta"	U.S.S. "Wheeling."	Dry Dock Caisson.	[illegible]	"Sadie."	Tug "Fearless."	Tug "Walhala."	Pilot Boat "Gracie S."	Submarine "Grampus."
Ft In.	Ft. In.	Ft. In.	F	In.	Ft. In.	Ft. In.	Ft. In.	Ft. In.
174 0	174 0	105 0	17	0	145 0	99 7	83 0	63 3
34 0	34 0	22 0	5	0	26 0	22 5	24 5	11 7
21 9	21 9	34 0	1	1	17 0	13 5	12 0	11 7
600	580	566		74	200	140	102	96
ft. 0½ in.	6 ft. 11 in.	19 ft. 4 in.	3 f	¼ in.	3 ft. 6 in.	3 ft. 4 in.	8 ft. 10 in.	7 ft. 10½ in.
ft. 0½ in.	9 ft. 9 in.	19 ft. 4 in.	6 f	6 in.	10	9 ft. 9 in.	8 ft. 5 in.	9 ft. 3½ in.
10	10	8		11	13	5	5	3
6	6	5		4	3	13	—	—
2	2	3		2	1	1	1	1
2	2	1		—	—	—	—	—
12	12	12		10	4	4	7	7
2	2	—		2	15	2	—	—
17	17	16		17	9	4	9	8
—	—	—		4	+2	—	—	—
17	17	16		12	15	12	8	8
1	1	1		1	1	1	1	1
218	218	164		0	194	155	145	180
75	75	89		4	80	75	85	132
34	34	15		4	30	20	23	12
30	30	15		4	28	18	22	8
110	110	60		2	86	62	38	40
14	14	18		4	14	14	10	14
7	7	10		7	7	7	6	8
14	14	18		4	14	14	10	10
7	7	8		7	7	7	5	6
13¼	13¼	17¾		½	13½	13	9½	9½
243	243	173		0	194	134	60	63
2·47	2·39	3·27		0	1·03	1·04	1·65	1·52
ft. 6 in.	13 ft. 6 in.	14	13	0	13 ft. 6 in.	13	11	4 ft. 6 in.
18	18	15		8	18	18	18	Level
ft. 3 in.	0 ft. 3 in.	5 ft. 3 in.*	0 f	in.	0 ft. 4 in.*	0 ft. 4 in.	0 ft. 4 in.*	—
ft. 8 in.	0 ft. 8 in.	1 ft. 8 in.	0 f	in.	0 ft. 8 in.	0 ft. 8 in.	0 ft. 6 in.	0 ft. 6 in.
2	2	5 ft. 6 in.*	1 f	in.	1 ft. 8 in.	1 ft. 6 in.	1 ft. 2 in.	—
14¾	15	24½		¾	15	15½	14½	14½
14¾	15	20½		¾	15	15½	14½	14½
14¾	15	16		¾	15	15½	14½	14½
14¾	15	6		¾	15	15½	14½	14½
Level	Level	Level		el	Level	Level	Level	Level
None	None	21 in. in 140 ft.		e	None	None	None	None
ft. 4 in	5 ft. 4 in.	5 ft. 10 in.	5	in.	5	5 ft. 6 in.	5 ft. 6 in.	8 ft. 4 in.

length of 40 feet and about 13 inches square, in the line of keel and launching ways. In this connection, I understand that a large cruiser has been recently built at Greenock without piling, as the ground is nearly all solid rock.

The ground ways for the "South Dakota" consisted of two pieces of Oregon pine, each 18 inches by 10 inches, placed 11 inches apart, giving 36 inches bearing surface, the sliding ways being similar but generally 8 inches thick. In the "Russell" both the standing and sliding ways were of pitchpine, 48 inches by 12 inches, made up of 4 and 3 solid pieces respectively. While I do not condemn Mr. Dickie's form of ways, I really do not see much advantage in it. Here I may say the launching weight of the "Russell" was, including cradle, 5,980 tons, with a pressure of 2·45 tons per square foot on ways, as compared with 6,190 tons and 2·96 tons per foot in the "South Dakota." The maximum velocity attained in the "Russell" was 12 knots as against 11·36 knots per hour in Mr. Dickie's vessel.

Coming to the making-up for launching, while I admire the careful calculations and forethought with which the design was prepared and carried out, I cannot quite understand, for instance, the apparent economy in the timber used, especially in a country where that material is so plentiful and so much cheaper than it is here; the carrying of the standing ways on a series of trestles at the fore end, where the height of keel above the ground was greatest, involving the cutting up of quantities of timber which may or may not be of use afterwards, and a considerable amount of labour in preparing does not

reason to alter our method; indeed, I consider that to depend on the bearing of angle lugs on the plate edges, as in the case of the "South Dakota," rather a risky business.

A notable feature in the launch of the "South Dakota" is the almost entire absence of inside shoring, this only being resorted to to a small extent in the boiler rooms. I am afraid had the work been supervised by a British Admiralty overseer something more would have been required. In the "Russell" we had about 20 tons of timber shoring inside, and I am not prepared to say that it would have been wise to dispense with much of it.

Mr. Dickie says "no blocks were fitted to the under side of the ways, they being made up of thin pieces of board and shingles. This is a cheap way to make them up and it is also the best way, as the blocking then forms a nice soft cushion." I am sorry I cannot agree with Mr. Dickie in this method, but much prefer the usual method of making the ground ways up in a substantial way, firmly, securely and fair. Then as to side-shores, I must again differ from Mr. Dickie. Side-shores to the outside of the standing ways are accessible right up to the launch, they are in everyone's view and hence more reliable than any attachment across the bottom of vessel between the ways.

As to releasing the vessel, while the method adopted in the "South Dakota" is ingenious and looks well on paper, and although used successfully, I would much prefer some arrangement accessible from the outside, where, in case of any hitch occurring, steps could be taken without any risk to life or limb to relieve the dog-shores.

In considering the paper generally, there are one or two further points of comparison that might be of interest, as, for instance, his calculations as shown in the curves gives 1,655 tons of pressure on the fore poppet. In the case of the "Russell" we had 1,100 tons, or more than 500 tons less. Their system of drags is worthy of notice. They have carried the rope stops to a greater extent than probably has been done on this side. We have used rope stops as well, but perhaps not quite to such an extent as in the case of Mr. Dickie's vessel, and they no doubt afford a splendid means of checking a vessel's way, but in addition to the rope stops they depended, apparently, upon a mud

bank on the other side. I do not know the breadth of the water available for launching purposes, but it seems to me it is rather a risky thing, even with a heavy war vessel, to allow her to be run on to a mud bank and be embedded to the extent of 150 feet. It may be they had no alternative. Mr. Dickie gives the cost of the launching operations, dividing it into three heads, viz., "preparing for the launch," "the launch day," and "after the launch," the total cost of labour only running into something like £700. I would have liked if some more information could have been obtained from Mr. Dickie as to how long before the launch this cost ran—if all his material for the making-up of that vessel had been prepared for some considerable time previously, or if this cost allows only for a few days prior to the launch, or at any rate a week or two. Otherwise, if that was the total cost of the launch, it does not seem excessive, but quite moderate. Another noticeable feature in the launch is, they did not turn the ways in till the morning of the launch, and from the morning to the evening of the same day the whole hardening up of the vessel and the moving of the keel blocks had to be done. This is not the practice in any yard in this country so far as I know. Certainly it is not done with us in Jarrow; but it must have meant that all the making-up of the vessel under the bottom—all the material necessary for that, and bringing it up to a close fit, must have been prepared beforehand, and simply removed, and then on the morning of the launch the sliding ways turned in and this material replaced and wedged up. If that is all that was done, of course the opera-

building small wooden vessels, probably up to 80 or 90 feet in length, and they were not able to excavate the ground on the water's edge owing to the cost, it being rock. At high tide there was a drop of 12 feet, and yet they launched them from that and just let them drop the 12 feet: it used to send a column of water up through the rudder trunk some 30 feet high, so that Mr. Dickie's experiences in America show the great transition that has taken place in the launching of ships even in our own time.

The VICE-PRESIDENT (Mr. W. H. Dugdale) said the discussion would stand adjourned.

The meeting then dissolved.

NORTH-EAST COAST INSTITUTION OF ENGINEERS AND SHIPBUILDERS.

TWENTY-FIRST SESSION, 1904-1905.

PROCEEDINGS.

FOURTH GENERAL MEETING OF THE SESSION, HELD IN THE LECTURE THEATRE OF THE LITERARY AND PHILOSOPHICAL SOCIETY, WESTGATE ROAD, NEWCASTLE-UPON-TYNE, ON FRIDAY EVENING, JANUARY 20TH, 1905.

THE RIGHT HON. LORD ARMSTRONG, PRESIDENT, IN THE CHAIR.

The SECRETARY read the minutes of the previous General Meeting, held at Newcastle-upon-Tyne, on December 16th, 1904, which were confirmed by the members present and signed by the President.

The PRESIDENT appointed Mr. W. G. Spence and Mr. J. C. Stirzaker to examine the voting papers, and the following gentlemen were declared elected:—

MEMBERS.

Clephane, Alex., Marine Superintendent, 10, Chancelot Terrace, Ferry Road, Edinburgh.

Murray, William I., Eng. Lieut., R.N., 5, Belgrave Terrace, Newcastle-upon-Tyne.

Sutherland, Donald, Chief Draughtsman, c o Messrs. Hawthorn & Co., Ltd., Leith, N.B.

Tait, Peter W., Marine Superintendent, 41, Dudley Gardens, Leith, N.B.

GRADUATE.

Brown, Rochester, Apprentice Engineer, 67, Osborne Road, Jesmond, Newcastle-upon-Tyne.

THE ENGINEERING GOLD MEDAL.

The PRESIDENT said—The next business on the agenda is a very pleasant duty, and that is to present the engineering gold medal to Mr. Max Otto Wurl for the very excellent paper he read during last session on "Technical Education in Germany," and I have very great pleasure now in handing it to him, offering with it my best congratulations.

Mr. WURL received the medal amid general acclamation.

Mr. W. R. CUMMINS replied to the discussion on his paper on "A Comparison of Vertical and Horizontal Tubes in Water-Tube Boilers."

Mr. FRANK LITTLE read a paper on "Petrol Motor Cars."

MR. W. R. CUMMINS' REPLY TO THE DISCUSSION ON HIS PAPER ON "A COMPARISON OF VERTICAL AND HORIZONTAL TUBES IN WATER-TUBE BOILERS."

Mr. W. R. Cummins replied to the discussion on his paper on "A Comparison of Vertical and Horizontal Tubes in Water-tube Boilers." He said—In reply to Mr. Woodeson's remarks, I am much gratified by the way in which the somewhat theoretical views of the paper have been borne out and confirmed by the very practical and conclusive experiments carried out at the Victoria works. The fact of the two types of boiler being side by side, and under identical conditions, gives a peculiar value to the experiment, and I think Messrs. Clarke, Chapman & Co., and Mr. Woodeson are to be congratulated on the success of what must have been a costly experiment. I am glad to see that Mr. Woodeson recognises the great importance of steam space for water-tube boilers with boilers of the horizontal tube type. The only way to get increased steam space conveniently without unduly increasing the diameter of the drums is to fit additional ones. This does not give nearly such an effective space as that of the Cummins boiler. Height is the important factor in steam space, as those of you who have had anything to do with evaporators will know. The ideal is a large and high space right above the water-level. When supplementary drums are fitted they must be connected to the main drums by necks. Now, although these necks must be of comparatively large size (large enough to let a man through), they will not, if the boiler takes it into its head to prime, prevent water from being drawn up into the supplementary drum.

Mr. Woodeson is quite correct in maintaining that most of the vertical water-tube boilers are much more easily cleaned and examined internally than the horizontal type. This point was not sufficiently emphasized in the paper. There is not only the trouble and time required to take off the doors to be counted, but also the expense of renewing the jointing material. In a large installation the number of these caps may amount to

many thousands. Very often the nuts securing these caps get set fast and have to be split off, entailing extra expense for renewals.

Another serious disadvantage with boilers of the Durr and Niclausse type is, that if the boiler is emptied for examination the outer tube remains about half full of water, thus preventing a full examination. In the Cummins boiler the removal of seven manholes gives full and free access to both ends of every tube.

I agree with Mr. Woodeson that the evaporative efficiency of both types of tube are about equal, but that the vertical tube will give a higher rate of evaporation per square foot of surface, thus increasing the weight and cost economy.

In reply to Mr. Robert Baillie's remarks on large and small tubes, this has been touched on in the paper. As a rule the horizontal type boilers have large tubes and the vertical type small tubes. The reason of this is, of course, obvious, viz., that the horizontal tube must be large to ensure water circulation. The original Babcock & Wilcox marine type boiler had all its tubes of, I believe, 1¼ inches diameter. These gave so much trouble from burning out that in their latest design the two lower rows have been largely increased in diameter.

There is no need to repeat here the advantages of the small diameter tube. Even when using a vertical tube it is advisable to keep the length as short as convenient, as with tubes of excessive length the upward flow may have a high velocity, sufficient, in fact, to allow steam plugs to be formed, with conse-

This will go on increasing until the American turbine tool mentioned by Mr. Baillie has to be used to hustle it out.

With regard to the steam space of the Haystack boiler, it is true that the steam pressure of these is low, but they are almost invariably in use with paddle engines, which, owing to the gulping nature of their demand for steam, are peculiarly liable to cause priming. I must say that I would not care to be behind the cylinder cover of a paddle engine taking its steam from the drums of the present-day water-tube boiler, even if they were increased in ratio of the different steam density. I think the Stirling Company are to be congratulated on the way they are tackling the difficulty of fire casings. The light firebrick is a most ingenious idea and must take off a large amount of weight owing to the enormous area of casing required. I was not aware that the Stirling Company had altered their original arrangement of pitching their tubes. By making the longitudinal pitch rather more than twice the diameter of the tube, it of course becomes quite easy to withdraw any tube without cutting good ones, but it entails a large sacrifice of space. For instance, suppose 2 inches tubes are used, the pitch will be increased from 3 inches to 4 inches—34 per cent.

With regard to the test on the Cummins boiler, this was only a rough preliminary test previous to putting the boiler on a long test under every-day conditions to see if any defects developed themselves. The boiler has now been working for over a year on a very trying load, viz., a full head of steam may be required at one moment, and shortly after the load may drop to zero. During this time it has given the greatest satisfaction. In comparing the rate of coal consumed per square foot of grate with the funnel temperature, Mr. Baillie has fallen into a very common error. The funnel temperature has nothing to do with the coal per square foot of grate. It is the coal per square foot of heating surface which is the main determinant of the funnel temperature. By increasing the heating surface the funnel temperature may be reduced to any extent desired, but at a large sacrifice of weight, space and cost economy.

In reply to Prof. Weighton, the Cummins boiler is intended to be built in units up to say 2,000 square feet of heating surface. Prof. Weighton will have noticed the annular form of both the upper and lower drums. As the boiler increases in diameter,

the hole into the combustion chamber also increases in diameter, as also does the stay tube in the top drum. In other words, the thickness of the annular ring does not vary much for the different sizes. There is, however, no difficulty about fitting stays if desired (the first designs were made with stays). The lower drum may be stayed by gussets between the shell and bottom plate, or by stays from the tube plate (the nuts of these latter would be, of course, protected from the fire). Of course a tube is left out where the stay is fitted. The upper drum in the same way may be stayed by through stays. The baffle plate was made in sections. Prof. Weighton will have noticed from the diagram that the innermost row of tubes has a gap in it. In the boiler now at work the sections were about 12 inches wide: they were placed in the gap and then threaded round.

In reply to Mr. Harrison and his criticism of the casing doors, the impression intended to be conveyed in the paper was that the doors were not exposed to furnace or combustion chamber heat. However, an ounce of fact is worth a pound of speculation, and the fact is that the hand can be placed without discomfort on these casing doors when the boiler is under full steam. It should be noted that these doors have no air-casing plates, as fitted to the ordinary smoke-box.

In reply to Mr. Buckland, I quite agree that firebrick structures, especially the firebrick tiles hung on iron casings, are a perfect nuisance on board ship, but a thick and self-supporting lining to the furnace, as in the Cummins boiler, will give no more trouble than the firebrick bridge. As regards his

the tubes. As regards the welded joint between the furnace plate and tube plate, modern welding has now arrived at such a state of perfection (especially in Germany) that it has become quite reliable and infinitely preferable to a riveted joint. The defect of the Convector boiler was that the depth of water-tubes between the combustion chamber and the outer casing doors (only two or three rows) was insufficient, causing the latter to become overheated.

In reply to Engineer-Lieut. Baker's remarks in regard to the Lagrafel d'Allest boiler, I regret that the diagram as shown in the paper is not quite correct. A firebrick baffle should have been shown between the lowermost and second row of tubes. The gases from the furnaces, instead of passing at once upward among the tubes, pass into the combustion chamber, which is situated in the central space between the two nests of tubes, and then spread amongst the tubes to the uptake. With regard to the recent examples of Babcock & Wilcox combustion chambers, although the cubic contents are ample, I contend that they would be more efficient if their proportions were so altered as to give, with the same volume, twice the height. I am surprised to hear that the space above the lower nest of tubes in the Belleville boiler is not regarded as combustion chamber. I have always understood that its function was to complete the imperfect combustion obtained in the lower combustion chamber. If it is of no value as a combustion chamber, why are not the economizer tubes placed immediately above the lower nest, and thus save what must be valuable height if the boilers have to go under the armoured deck? With regard to the space in the centre of the upper drum of the Cummins boiler, although this is in communication with the combustion chamber it is not counted as combustion space, as there can be no circulation of the gases. The central tube is merely a convenient method of staying the upper drum. The space will be utilized for a superheater or economizer when these are fitted. There has not been the least sign of distortion or overheating of the plate.

The circulation of water in the Cummins boiler is under exactly similar conditions as in the Yarrow boiler, which has no special downcomers. In that boiler and in the Cummins, the tubes appear to settle it among themselves. It is most probable that in the Cummins boiler the outermost

row are downcomers. Engineer-Lieut. Baker says that in the Belleville and Babcock & Wilcox boilers, the water has no option but to follow the course laid out for it; but in these and other horizontal tube boilers, bent and bulged tubes testify that on occasions the water, owing, no doubt, to a touch of original sin, has positively refused to follow the narrow path of virtue set out for it, but has idled on the broad path, to the destruction of its unfortunate partner, the tube.

With regard to the point raised about deposit in the tubes and circulation, as pointed out in replying to Mr. Baillie, I do not think the circulation is of so much importance in preventing the formation of scale as that the matter in suspension cannot settle in vertical tubes. Vertical water tubes do, however, after having been at work, look as if they had been scoured. If the flow in any of the vertical tubes were sluggish or even stopped altogether, this would indicate that the tube was no hotter than the water, and hence the conditions for depositing would not be favourable. As a matter of fact the tubes of the Cummins boiler after a year's work do not show the least deposit.

In reference to the point raised about vertical tube and overheating, it is most difficult to overheat a vertical tube, as the greater the number of bubbles formed, the greater is the circulation, as the circulation is induced by the entraining action of these bubbles. Of course the tube may be too small, when a steam plug may be formed, but with tubes of say 2½ inches diameter this could not occur. With tubes slightly inclined to the horizontal, the steam bubbles collect on the top of the tube. If

sections of the baffle are renewed when necessary by sliding the sections round until they come to a gap in the innermost row of tubes, when the section will come into the combustion chamber.

With regard to the jointing of the doors on the Cummins boiler, Plate XXXVIII. shows how the doors are constructed so as to make an air-tight joint.

Mr. Lewis Taylor confirms the superiority of the vertical tube.

In referring to stayed surfaces I named the Hornsby and referred to the older horizontal tube type. The fact that this type has now been discarded for the vertical is a very good testimonial for the latter.

In regard to Mr. Riseley's remarks, he seems to have contradicted himself. He says in the first part of his remarks that the most important conditions are those affecting capital economy and fuel economy. He says further on that the gases leaving the boiler should have about the same temperature as the steam in the boiler. In order to get anywhere near these conditions, a very large amount of heating surface must be used, which entails a large capital outlay, on which interest and depreciation has to be paid. Moreover, the heating surface (*i.e.*, the tubes) has more depreciation than all the rest of the boiler put together.

I am glad to see that Mr. Riseley approves of the small diameter tube. If, however, he were to use the vertical tube he would get a larger evaporation per square foot of surface, hence some of the surface could be dispensed with and thus bring down the capital cost. Mr. Riseley asks why marine engineers do not use superheaters. Many years ago superheaters were quite common on board ship. The superheaters, however, used to burn out frequently, but the greatest trouble was experienced with the cylinders and valves.

It is quite true that the design of superheaters has been much improved of late years, but it is of paramount importance on board ship that the engines do not stop from the time they leave one port until they arrive at the next.

In an electric light station, the spare plant can always be switched on. With superheated steam also the best and most expensive cylinder oil is necessary and a large quantity has to be used.

The problem of a perfect oil filter in a small space has not yet

been solved. These are some of the reasons why superheat is not popular on board ship. I notice that the type of boiler Mr. Riseley uses is a modification of the Babcock type, *i.e.*, a fire-brick furnace is used and the gases do not go directly upwards from the firebars through the tubes. By carrying up the tubes so much higher, as in the boilers he is running, quite a decent combustion chamber is formed.

Mr. Riseley says he has solved the problem of making a brick furnace which does not fall to bits on land. I do not think he would be so successful on board ship.

Mr. Riseley thinks the test on the Cummins boiler unsatisfactory. I think he has only looked at one of the items, viz., the 8·81 lbs. of water per lb. coal, or what has more meaning, 10·6 lbs. from and at, and I should like to draw his attention to the dry steam and the water evaporated per square foot of heating surface.

As regards the paragraph about the temperature of the steam which Mr. Riseley does not understand, the temperature of the steam issuing from the safety valve was found to be 320° F. Thus $320-212=108°$ F. of superheat, showing that the steam in the boiler at 175 lbs. pressure contained no moisture. I should like to know whether Mr. Riseley has used a steam calorimeter on the steam, before it enters the superheater, to see what the capital cost of the heating surface is, that is required to evaporate the contained water, and then do the superheating.

Mr. Murray says that he does not agree with my remarks that as regards actual cleaning and examination there is not much to

surrounded by red-hot brick-work. Boiler tubes will not always oblige you by leaking at front end only. Then take the marine type. The tube back ends are in a decidedly hot shop with plenty of firebrick about. The main difficulty arises when the tube splits or bulges, which is the usual method of failure, when of course it has to be cut out. In that case both the types of boiler have to be emptied of water. In the case of the Cummins boiler you have to wait until the inside of the boiler is cool enough to get in, and the sliding doors give access to the outside of the tubes. But in the case of the Babcock, before you can get access to the outside of the tubes you must wait until the firebrick has cooled down—a much longer affair. With regard to the fire-grate of the Cummins boiler, it is only the smaller sizes which have a circular grate, as in these the boiler shell happens to be about the same size as the circular furnace. For larger sizes the grate and its casing is made square, or any other shape desired.

As regards very high pressures: as the Cummins boiler does not prime, there is no need to have the boiler pressure 50 lbs. more than that at the engine; and at any rate the extra high pressures have gone out of vogue. The conditions at the throat of the Cummins boiler are in no way worse than those in the ordinary Scotch boiler, where the gases flow into the combustion chamber over the bridge. The space occupied by the stay tube through the upper drum does not, as Mr. Murray says, assist the combustion. This place, however, as mentioned before, will be utilized for a superheater or an economizer, when these are desired.

Mr. Murray also uses the lbs. of coal per square foot of grate to compare with the temperature of the flue gases. The heating surface of the Cummins boiler is purposely made with a smaller ratio to the grate surface than in the standard Babcock boilers.

I am glad to see Mr. Nicholson supports the vertical tube, and I should think the balance of advantages would lie with the straight tube even for the small sizes, such as 1 inch diameter. I note that Mr. Nicholson, in his experience of express boilers, found that the dryness of steam is as good as with the cylindrical boiler. Of course a glance shows that their steam space is superior to that of the Belleville and Babcock.

In reply to Mr. A. E. Sharp, I wish to point out again that

the combustion chamber in the Cummins boiler is not in the upper drum. It is immediately above the furnace and the whole current of the gases flow into it. The water circulation is exactly the same as in the Yarrow boiler.

The feed is put into the lower drum in this case; but the quantity of water circulated must be many hundred times the amount of feed water. The upward flow of water in the tubes exposed to the greater heat is caused by the entraining action of the steam bubbles.

If there is a tendency to stagnate in any particular tubes it means that they are not receiving much heat, hence they will commence to become downcomers and let down as much as the other tubes are letting up.

In conclusion, I beg to thank the members of this Institution for the interest they have shown in the paper, and the kindly way in which they have discussed it. I also think the Institution is indebted to those gentlemen who, although not members of the Institution, have so kindly come here and contributed to the discussion.

The PRESIDENT said—Before we pass from this subject I think it is only right that I should propose a hearty vote of thanks to Mr. Cummins for having come up here and given us such an excellent reply as he has done to-night to the criticisms that were passed on his paper. Therefore, I have much pleasure in proposing a most hearty vote of thanks to Mr. Cummins, and I feel sure it will be carried by acclamation.

[redacted]

PETROL MOTOR CARS.

By FRANK LITTLE, A.M.I.E.E., Member.

[Read in Newcastle-upon-Tyne, on January 20th, 1905.]

When your Secretary approached me to read a paper on Motor Cars, I think he hardly realized that the subject was such a broad one, so I decided to confine myself to petrol motor cars alone, hoping that some other member will follow with papers at a later date on cars driven by steam and electricity.

The automobile industry has made such rapid strides during the last few years that it certainly claims the attention now of this Institution.

It might have been interesting to survey the historical evolution of the petrol vehicle up to the present day, but we must leave this for another occasion and confine ourselves to the study of some of the leading features adopted by recognized makers to-day.

The petrol motor obtains its power from the direct consumption of petroleum spirit. The engine works best and most economically at a constant speed, and in order to get different speeds at the road wheels, it is necessary to employ gearing which will reduce or alter the speed of the latter.

Different cars have different ways of accomplishing this, some have two speeds, others three and more. These gears are arranged at a certain ratio to each other, consequently various speeds can be got at the road wheels.

The tendency on modern cars is to arrange so that the engine drives as much as possible direct on the top gear.

The engine transmits its motion to the road wheels in a number of ways.

As in Plate XXXIX., Fig. 1, through the gear box to the gear shaft, thence by means of sprockets and chains to the road wheels.

As in Plate XXXIX., Fig. 2, through a jointed shaft called the cardon drive.

In Plate XXXIX., Fig 3, the engine shaft, placed horizontally on the car, drives by means of sprockets and chains a counter-shaft, and thence by further chain to the back live axle.

Plate XXXIX. Fig. 4, gives the highest efficiency of the four systems, giving a direct drive from the engine to the back live axle.

Amongst cars using transmission with side chains as in Plate XXXIX., Fig. 1, are the Albion, Beaufort, Brooke, De Dietrich, Durkopp, Fiat, Germain, Gladiator, James and Brown, Leon Bollée, Maudslay, Mercedes, M.M.C., Napier, Panhard, Peugeot, Pipe Daimler, Star, Sunbeam, etc.

Cars using cardon shaft drive, as in Plate XXXIX., Fig. 2, are the Argyll, Ariel, Belsize, Clement, Decauville, De Dion, Dennis, Darracq, Elswick, George Richard's Blazier, Humber, Renault, Ryknield, Simms-Welbeck, Speedwell, Spyker, Swift, Talbot, Thornycroft, Vulcan, etc.

Cars using chain drive, with counter-shaft as in Plate XXXIX., Fig. 3, are the Belsize (Junior), Siddeley, Wolseley, etc.

Cars driving direct with central chain, as in Plate XXXIX., Fig. 4, are the Cadillac, Duryea, Ford, Oldsmobile, Rational, Vauxhall, etc.

We will now examine each part of the petrol car in the following order:—

Engine.—Cylinder, piston, connecting rod, carburettor and mixer, governor, valves (exhaust and inlet) and operating mechanism.

Ignition.—Tube, electric, including high tension with

The motive power is derived from the mixture of air with the vapour of petroleum spirit. The mixture is introduced into the cylinder itself. When the piston is at the top of the cylinder, a cushion of gas is formed between the cylinder top and the piston. The gas is then usually ignited by means of an electric spark. Heat is generated, expansion takes place, forcing the piston to the bottom of the cylinder. The impulse of the explosive stroke is in turn transmitted to the flywheel attached to the crank shaft.

The Otto cycle is employed, giving only one explosion for four strokes of the engine (see Plate XL., Figs. 1, 2, 3 and 4). These are termed respectively:—The suction stroke, the compression stroke, the explosive stroke, and the exhaust stroke. To describe them properly, suppose the engine to be running. What happens?

The Suction Stroke.—Plate XL., Fig. 1. The piston, A, being at the top of its stroke, and the piston chamber, B, being empty of gas, as the flywheel, C, revolves, it begins to pull the piston down and creates a partial vacuum in the combustion chamber, D. This chamber has two valves opening into it—the inlet, E, and the exhaust valve, F. As the piston travels down, the suction caused by it opens the inlet valve, and the combustion mixture rushes in and fills the cylinder.

The inlet may be opened either by the suction of the piston or by mechanism, but in either case the effect is the same.

The Compression Stroke.—Plate XL., Fig. 2. The suction having stopped, the inlet valve is closed. The momentum of the flywheel then thrusts the piston up to the top of the cylinder again. As the piston rises, it compresses the gas into the small space in the combustion chamber.

The gas under compression is usually from 70 lbs. to 80 lbs. per square inch.

The Explosive Stroke.—The explosive mixture is now ignited by means of an electric spark, or other methods to be described later, an explosion takes place, forcing the piston down. The explosive pressure varies from 270 to 300 lbs. per square inch (see curve, Plate XLI.). The valves at this moment are both closed, as shown in Plate XL., Fig. 3.

The Exhaust Stroke.—The impulse given to the flywheel brings the piston up again, but at the beginning of the upward

stroke the exhaust valve is opened for the rejection of the exploded gases. The arrangement is shown for opening the exhaust valve in Plate XL., Fig. 4. As the piston reaches the top of the stroke the exhaust valve is closed.

These figures in Plate XL. show the complete cycle, from which it will be seen that the crank shaft makes half a revolution for each stroke of the piston, and therefore completes two revolutions for every explosion.

The actual working of the petrol motor may be easily understood from a careful study of the accompanying plates. In practice, however, it is not such a simple matter, but consists of many more parts than have yet been named.

Choice of Cylinders.—Single cylinders are only recommended in small cars requiring up to 8 H.P. Above this power two or four cylinders are the commonest numbers, but engines are being built with three, six, and eight cylinders. Although in each cylinder the same process is going on, the increase in the number of cylinders involves considerable complications with the inlet and outlet valves and the mechanism for working them.

Leading makers are now building up their engines with singly-cast cylinders, and we shall probably see twin-cylinder castings disappear.

The single cylinder appears to be so much more easily cast and machined, whilst its cooling, mounting and dismounting are so much more effectively and cheaply done.

Carburettors.—A carburettor is employed to vaporize the petroleum spirit and is also designed to vaporize the spirit and

Surface Carburettor.—In this type of carburettor the engine suction draws the air over the surface of the petrol. The air becomes then charged heavily with petrol vapour, and in its passage to the inlet valve is again diluted with more air in such proportions to give the best explosive result.

Spray Carburettor.—The spray carburettor has many different patterns, although the main principles are the same. The principle is to evenly divide the spirit so that it presents a maximum amount of surface to the incoming air, and is capable of being held in suspense in the air-current for the short time necessary for the transformation from the liquid to the gaseous state.

There are various ways of accomplishing this purpose, but in most cases the effect is that a continual flow of air issues from a conical nozzle, which creates a vacuum in the central portion of the flow, thus causing the suction of the motor to draw the air through a contracted tapered passage, over a nipple having a very fine hole, or series of holes. The vacuum that is produced by the rush of air causes the petrol to issue in the form of a finely divided spray, which, in meeting the current of induced air, is immediately vaporized and carried over to the motor cylinder, after being mixed with a quantity of additional air admitted to the aperture in the uptake of the carburettor.

The chief advantage of the spray carburettors is that they can be adjusted to use petrol or alcohol of any density, or even paraffin, after preliminary warming by a few minutes on petrol.

The worst fault with this carburettor, unless provided with an auxiliary air-inlet, is, that it will not generate the mixture in constant proportions at varying speeds, giving too rich a mixture at high speed, which, if corrected, renders the mixture weak at low speeds.

The faster the air passes the jet, the greater the suction effect will be, so that when the motor increases its speed, the proportions of the mixture are apt to be altered.

The speed of the air should be from 80 to 100 feet per second.

This brief description will, I hope, be enough to enable you to understand the more full and technical details that accompany the illustrations of the carburettors to be mentioned.

I will now describe some carburettors in practical use.

The Murray Carburettor and Governor.—The Murray carburettor is interesting inasmuch as it fulfils the condition required above. It is of the float-feed spray type. Its object is to control the auxiliary air inlet by a centrifugal governor of long range. With such a governor the auxiliary air valve will commence to open at about 200 R.P.M. and continue to open until a maximum speed is obtained of say 1,000 R.P.M.

In the arrangement shown in Plate XLII. (to some extent diagrammatically) the lever, P, operatively connected to the governor, N, is connected to one end of the floating lever, S, by a link, T, the other end of the floating lever being connected to a hand lever, U. The floating lever, S, is connected at its centre to a rod, V, carrying the throttle valve, D, so that the speed at which the governor operates the throttle valve can be varied by adjustment of position of the hand lever, U.

This combination possesses great advantages in that, as the valve, L, controlling the auxiliary air supply, K, is directly connected to the governor, while the throttle valve, D, is connected through the floating lever device, the motor may be set to run at any desired speed, while at the same time the auxiliary air supply is always commensurate with that speed.

Instead of the form of floating lever device described and shown, gearing or other equivalent devices may be employed.

The value of this system is apparent when it is remembered that most systems require separate levers for each of these operations.

At whatever speed the governor is set, it will maintain it

Accelerator.—A device called the accelerator is fixed in some ars to cut out the governor and render it inactive. The speed f the engine is then increased above normal.

Carburettors Continued.—The Rover carburettor (Plate LIII.) designed by Mr. E. W. Lewis (late of the Daimler Co.), is s simple as any I have seen.

The principle, to a certain extent, is novel, in that, not only the additional air admission regulated, but that passing the et is also regulated in volume and velocity.

Referring to the drawing, A is the float chamber; B is he body of the carburettor containing the mechanism for the utomatic action. This is constructed so that there is a partition between the jet chamber and the mixing chamber above. 'he body, B, contains a brass liner, which is bored to receive he plug, C, and its upper portion is fitted to the piston, E, aving a single ring packing at its lower edge. E is free to ove vertically in the liner and is screwed to the plug, C, the wo being attached to the rod, I, by a cross pin. The piston, E, as triangular air ports, H, cut in it. The plug, C, is made eavy, and gravity is substituted for a spring in order to return he plug and piston to their normal positions as shown. 'hrough the plug, C, are drilled the oblique radial holes, there eing six rows of these, each row containing more holes than he row above. It will be noticed that the two upper rows are bove the level of the jet, D, and open into the mixing chamber etween the piston, E, and the base of the liner. When the ngine is running, the reduction of pressure, or partial vacuum, n the mixing chamber raises the piston, E, and its attached lug, C, thus increasing three proportionate dimensions of the arburettor, viz., the number of holes, or, if the difference is mall, merely the area of the holes immediately beneath the iner through which the air is drawn past the jet; the cross ectional area of the orifice between the jet and the walls of the lug through which the initial air has to pass; and, lastly, the rea of the additional openings at H, and, therefore, the uantity of mixture which is sucked through the four triangular penings which increase the area of the outlet to the engine in roportion to its speed. Thus a difference in pressure distributes itself into a vacuum balance affecting directly the olume of the air admitted to the carburettor, and the velocity

at which such air is admitted. Hence, not only does the carburettor equalize and proportion exactly the feeds of petrol and air, but it corrects in a simple and efficient manner the venturi

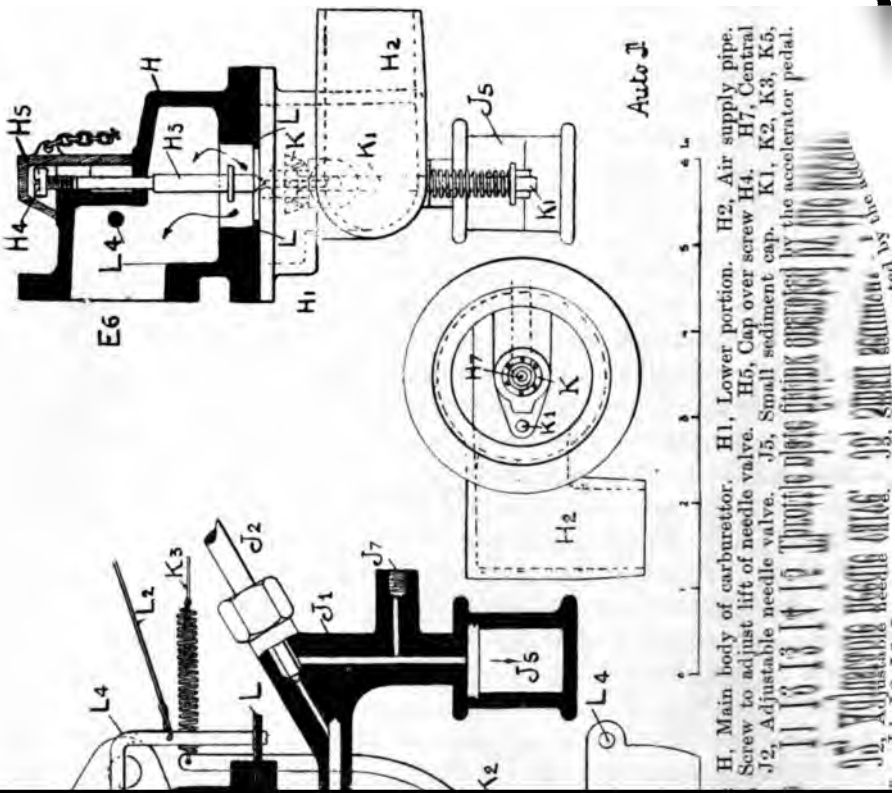

H, Main body of carburettor. H1, Lower portion. H2, Air supply pipe. Screw to adjust lift of needle valve. H5, Cap over screw H4. H7, Central J2, Adjustable needle valve. J5, Small sediment cap. K1, K2, K3, K5, the accelerator pedal.

This carburettor has the advantage that it is quite independent of a spring, gravity providing the governing effort, limiting the lift of the regulating piston, E.

Oldsmobile Carburettor (Illustration A).—Recently much interest has been given to the design of various automatic carburettors, all claiming to give a constant mixture at different engine speeds.

It is surprising that the American type of carburettor, as fitted to the Oldsmobile, is not more popular owing to its simplicity.

For instance, it has no float, nor has it a fixed size spray orifice. The petrol is controlled by a small tap from the front of the car, this being, in fact, the only control to the carburettor, and when once set in a certain position at starting, needs no further adjustment the whole time the car is running.

The additional air supply is not obtained by the suction of the engine overcoming the tension of a spring, or of gravity, but the extra air is given by merely pressing down the accelerator pedal, which operates on the carburettor, and the engine secures an increase of air proportionate to the increased amount of petrol, which the increased depression, occasioned by the increased engine speed, requires.

The petrol is sprayed upon a needle valve, having a collar for that purpose.

The weight of this needle valve (there is no spring) effectually prevents the carburettor from flooding with the spray supply open.

No artificial heating of the carburettor is required, and the engine invariably starts first turn over compression.

It is bolted right close to the valve chamber, and always remains quite cold, the gases entering the cylinder at a low temperature.

Valves.—Now consider the inlet and exhaust valves which control the admission of gas to the cylinder and the expulsion of used vapour from it. The inlet valve was, until quite recently, almost universally opened merely by the suction of the descending piston and thrust back to its seat by a spring, but as the work in petrol engines became finer and the adjustment more exact, it was found that the opening of the inlet valve by this means was not sufficiently accurate.

Mechanism has therefore been devised for opening it at a given moment in the stroke of the piston, and this mechanically operated inlet valve (Illustrations B, B[1], B[2]) is now used in nearly all but the very smallest and simplest engines, with the exception of some types of racing cars, which have still retained multiple automatic valves.

As only one explosion takes place for every two revolutions of the flywheel which is attached to the main crank shaft, a second shaft, called the half-time shaft, is used for the purpose of opening the inlet and exhaust valves. This is connected by gear wheels to the main crank shaft, the gear being so proportioned that it revolves only once while the main shaft revolves twice.

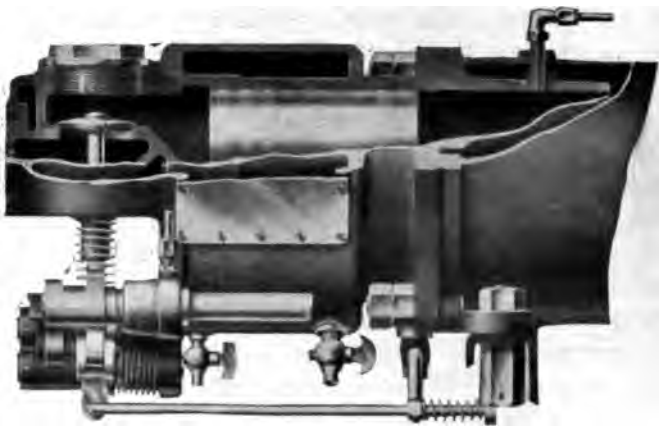

ILLUSTRATION B.—OLDSMOBILE HORIZONTAL ENGINE, SHOWING MECHANICAL

shaft, so that the inlet valve is open only during the induction stroke of the engine, and the exhaust valve is open only during the exhaust stroke, so that the back pressure that would otherwise be caused by a cylinder full of gas, is averted.

It is becoming more general to fix the half-time shafts for two or more cylinders on opposite sides of the crank shafts for actuating the inlet and exhaust valve spindles (see Plate XLIV.).

Ignition.—How is the charge of compressed gas ignited? It was formerly the practice to ignite the charge by means of a platinum tube, projecting from the wall of the cylinder, its

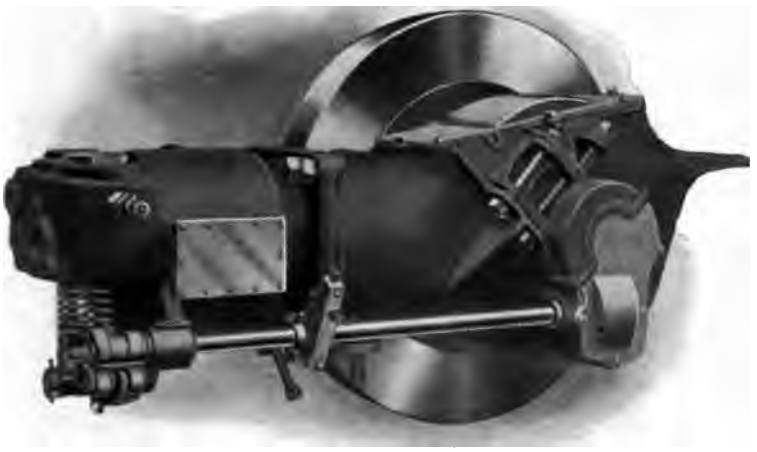

ILLUSTRATION B¹.—SHOWING 9 H.P. OLDSMOBILE HORIZONTAL ENGINE, EXTERNAL VIEW; NOTE THE COMMUTATOR AND HALF-SPEED SHAFT ARRANGEMENT.

outer end being set in the frame of a spirit-lamp, so that, as the piston rises to the compression stroke, the inflammable vapour was forced to the outer end of the tube and became ignited.

This method, called tube ignition, has now been abandoned in favour of electrical ignition, of which there are two principal forms, high tension and low tension.

High Tension Electrical Ignition.—In high tension electrical ignition, the firing is caused by an electric spark jumping across the gap of a sparking plug in the combustion chamber once every other revolution of the flywheel, and is arranged so that

the time of the spark can be varied by the person driving the car, who can thus cause the explosion to take place earlier or later in the explosion stroke.

To produce a high tension spark.—The current from an ordinary dry battery or accumulator is sent through an induction coil, in which is induced high frequency current of much greater strength than that given out by the battery or accumulator alone.

It is usual to employ four cells for a dry battery, giving 6 volts, or an ignition accumulator generally made up of two

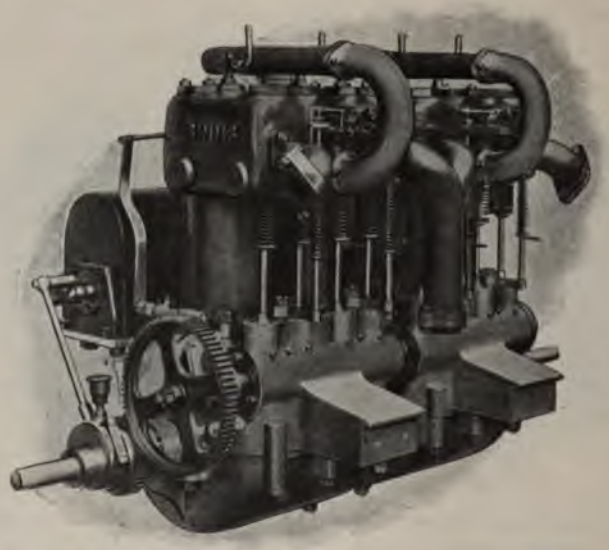

ILLUSTRATION B².—SHOWING MECHANICALLY-OPERATED VALVES, SPINDLES FOR INLET AND EXHAUST, FITTED ALL ON ONE SIDE OF ENGINE; ALSO MAGNETO.

cells, each giving, when fully charged, 2·2 volts, or a total voltage of 4·4, and should never be discharged below 3·8 volts.

One terminal of the battery is connected to the coil and one to the frame of the car, *via* the commutator.

See Plate XLV., Figs. 1, 2 and 3, for connections, shown diagrammatically.

The commutator or circuit-breaker must be employed in this system, to make and break the low tension current in the secondary coil, and at the right moment.

The simplest form of commutator is an insulated round drum, which is mounted on the timing, or two to one, shaft.

The circumference of this drum is fitted with a piece of brass or other conducting metal, which is directly connected to the timing shaft.

As the commutator revolves, it makes contact with a metal brush or flat spring, which is insulated and connected through a wire to the battery.

A mechanical connection from the driver's seat enables the position of the brush to be advanced or retarded so that the firing takes place a little earlier or later in each stroke, as may be desired.

Sparking Plug.—The sparking plug is built up in many forms, but all consist of a small central rod or wire; to one end is fixed a terminal, to which the high tension wire from the coil is attached.

This central core is passed through a tube of porcelain, mica, asbestos, or other non-conducting material, capable of resisting great heat.

The core and its insulating tube is fastened into a socket which in turn is screwed into the combustion chamber.

The current from the high tension coil flows down the centre conductor, finds itself compelled to jump the small gap between the points of the plug, causing the spark which ignites the gas.

There are many disadvantages with the high tension system, amongst others being the risk of short circuiting the high tension current, and the necessity for recharging the batteries if accumulators are used.

The Dynamo System.—The dynamo system is sometimes used as a source of current, either alone or in conjunction with storage cells.

If used with cells the dynamo merely charges the cells *en route* and saves the trouble of removing them from the car for this purpose, and prevents the possibility of being stranded for want of current.

Low Tension Magneto System.—A form of current which is coming largely to the front is the low tension magneto system.

Simms-Bosch.—In the Simms-Bosch low tension magneto system (Plate XLVI., Figs. 1 and 2) the magnet consists of two or three permanent magnets, A, of the ordinary horse-shoe type, which are mounted on a bronze plate, B.

An H-shaped armature, C, is fixed between the poles of the magnets.

The channels, D, of this armature are filled with insulated wire; one end of the wire is connected to a terminal, E, and the other to the core itself.

Between the armature and the poles of the magnets is mounted an oscillating shield of soft iron, F. This shield is caused to oscillate by means of a crank attached to one end. This crank is connected by a rod to the cam, G, on the half-speed shaft of the engine.

When the shield, not the armature, is caused to oscillate rapidly, currents of electricity are induced in the windings of the armature.

These currents are led away through an insulated wire to a special device, H, which automatically makes and breaks a circuit in the interior of the combustion chamber.

Albion Magneto System.—This system (Plate XLVII., Figs. 1, 2, 3 and 4) consists generally of a magneto electric generator, driven from the crank shaft of the motor.

The magneto consists of a simple form of ring-shaped armature bolted to the engine casing.

The field magnets are mounted on a spider keyed to the crank shaft, and rotate with it; there are no moving coils, commutators or brushes, and, therefore, practically nothing to go wrong.

The armature is built up of ring-shaped iron stampings having a portion on one side entirely cut away and a portion

A is the armature core, built up of soft iron sheets of the shape shown, and bolted rigidly to the engine casing as may be most convenient.

E is a portion cut away and F shows the reduced portion to accommodate the coil.

Plate XLVII., Fig 1, shows a side elevation and Plate XLVII., Fig. 2, an end elevation of the complete generator.

D is the crank shaft of the motor or any other shaft driven positively from the engine at the speed of the half-time shaft, or twice, thrice or four times this speed, as may be most convenient; to this is keyed a bronze spider, H, to which in turn are bolted the soft iron or steel pole pieces, G, to convey the magnetic flux from the permanent magnets to the armature. JJ are the permanent magnets bolted across these pole pieces, similar poles being bolted to the same pole piece. As the field magnets rotate, an alternating current is generated in the coil, F, the maximum E.M.F. being generated just after the pole pieces have passed the position shown in the drawing.

By closing the circuit of the coil while the magnetic flux through it is a maximum, and by breaking the circuit while it is about the minimum, we get a slightly magnetising effect, which keeps up the permanent magnetism of the field magnets. This removes the principal objection raised against magnetic ignition, that the magnets gradually weaken and require re-magnetising every few months.

Ignition Device.—The ignition plug proper consists of the ignition port cover carrying one insulated contact which projects into the combustion chamber, and alongside this, a rotating spindle, having at its inner end an arm which bears upon one insulated contact pin, the contacts being provided with platinum tips to prevent corrosion. To the outer end of this spindle is keyed a crosshead or double-ended lever, to one end of which is attached a spring tending to rotate the spindle so as to bring the arm into contact with the insulated pin; the other end of the crosshead receives a blow from the striking spindle which causes a sharp rupture of the circuit. This striking spindle is lifted by a simple trip cam on the half-time shaft, and it is made as light as possible, so that the lapse of time between the moment that it is freed by the cam and the rupture of the electric circuit and consequent ignition of the charge is reduced

to a minimum. This has been experimentally determined and found to be less than one four-hundredth of a second.

By setting the trip gear to fall while the crank has still 18 degrees to rotate before reaching the upper dead centre, it was found that the maximum torque and brake-horsepower of the engine could be got at a speed of from 550 to 850 R.P.M.; and it was also found that with the ignition fixed at this point there was no danger of a back kick in starting, and the engine ran quite smoothly and steadily as low as 150 to 200 R.P.M. By setting the trip gear 27 degrees before the dead centre, about 5 per cent. more power could be got at a speed of 950 R.P.M., but the power at 700 was 3 per cent. less than with the previous setting, and with the ignition set thus there was a slight risk of a back kick at starting. Practically, a moderate speed motor does all its work within a range of from 500 to 850 R.P.M., so it is evidently quite unnecessary to provide a variable ignition. Indeed it seems a distinct advantage to have a fixed ignition, as the above results indicate, for it is very probable that the driver would rather lose than gain efficiency on the whole by having a variable ignition, which might effect a slight saving at the top speed of the engine, but this would be more than compensated for by the inefficient setting at lower speed.

It is obviously desirable to simplify, as far as possible, the mechanism and driving of cars, and by fixing the ignition one lever is thus eliminated.

In ordinary high tension ignition there is, of course, considerable time lag between the making of the contact in the

Owing to the great heat developed in the cylinder of the engine, means must be employed to keep it cool.

Cooling.—There are two systems employed to cool the petrol engine—air cooling and water cooling. The former is used chiefly on small single cylinder engines used for motor cycles (Illustration C).

Air Cooling.—To effect this, flanges are cast on to the outer casing of the cylinder to help in the radiation of the heat. This system is only feasible when the vehicle is running against a current of air, because when the vehicle is standing or climbing a hill there is great danger of overheating.

The only large car cooling by air alone is the Lanchester, a condition only maintained by using fans.

Water cooling.—Water cooling is by far the most popular. A water jacket is cast to encircle the cylinder walls and the combustion chamber as in Illustration B.

ILLUSTRATION C. SIMMS' AIR-COOLED ENGINE, 3½ H.P.

Pumps.—The water is circulated by means of a pump (see pump drawings Plate XLVIII., Figs. 1, 2 and 3) or by natural or thermo-syphon action. A tank is usually fitted containing a supply of water. The water passes from the tank into the water jacket, where it absorbs the great heat given off by the engine. It then passes out to a radiator fixed in the front of the car.

Radiator.—The radiator usually consists of a series of pipes fitted with radiating flanges. The water then passes from the radiator to the pump and back to the tank.

Honeycomb Radiator.—Latterly a zinc tank made like a honeycomb (Illustration D) has been used instead of radiating pipes, and still more recently a series of some two hundred light vertical zinc tubes, expanded into shallow tanks, upper and lower, has been introduced, and is said to be more efficient than the honeycomb.

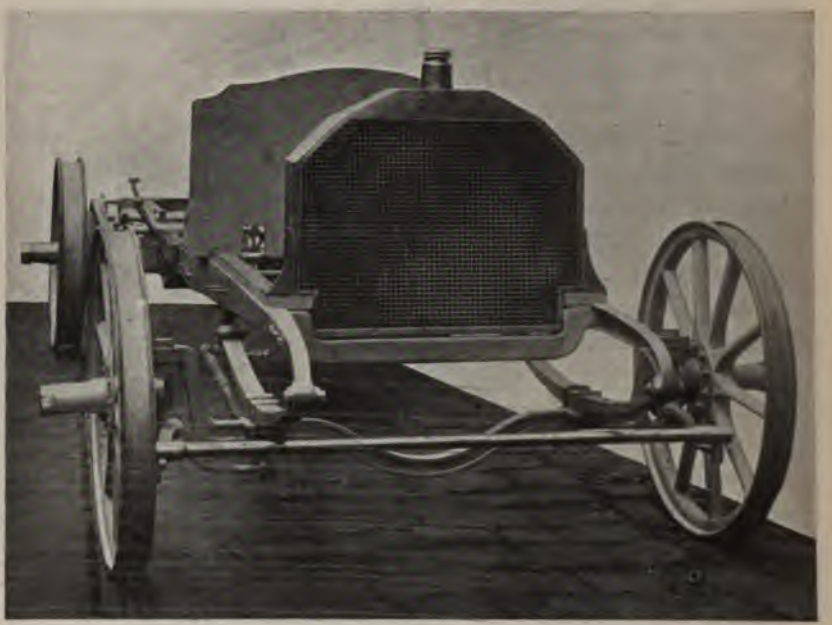

ILLUSTRATION D.—SHOWING HONEYCOMB RADIATOR, SPRINGS AND FRAME; ALSO I-SHAPED FRONT AXLE IN CROSSLEY CAR.

All these tubes, furthermore, run through a series of about twenty thin sheets of zinc of the same breadth as the tanks.

In gravity or thermo-syphon feed, the tank is placed above the water jacket; as it is heated by the engine it rises, and, emerging from the top, finds its way through the radiators back to the tank.

Gravity feed is simple but question whether as efficient.

It is possible to keep the water too cold. If the temperature of the water is below that at which the vapour is formed, a large

proportion of the heat generated by the combustion goes to reheat the cylinder walls.

The circulating system should be designed to prevent air locks, and an air cock should be provided at the highest point of the system and a drain cock at the lowest, so that for cleansing purposes and in frosty weather the water can be easily run off.

The car should have not less than half a gallon of water per indicated horsepower.

The temperature of the water leaving the cylinder jacket should be about 170° Fahr.

Lubrication.—Lubrication comes under the three main headings of gravity feed, splash lubrication and forced feed.

The first and second systems, being the most restricted, in a sense, may be discussed first.

Gravity Feed Lubrication.—Pure gravity feed consists of a sight feed cup of toughened glass with a metal cap, in which is a little shuttered air hole, the closing of which regulates the supply through the tube beneath the cup to the part to be lubricated. This is the simplest form of gravity feed.

Splash Lubrication.—Splash lubrication is very universal for all bearings inside the motor, such as those for the crank shaft, cam shaft and cams, enclosed gears and the lower ends of the connecting rods.

It simply consists of a bath of oil inside the crank chamber, the cranks dashing the oil over all the working parts.

It is a dirty but thoroughly effective system, and is also used for the differential gear and the change speed gearing.

Forced Feed Lubrication.—In the forced feed lubrication both mechanical and physical systems are employed.

The former system is employed by some of the leading makers, channels are bored centrally through the crank shaft, cranks, crank pins, connecting rods, and gudgeon pins (in the piston).

The oil is thus driven by centrifugal force through all these to their bearings.

Physical Feed Lubrication.—In the physical system, means are employed to utilize the pressure from the exhaust or water system; under this action special means are employed to force the oil along the branch pipes leading from the lubricator.

In pressure feed the reservoir may be placed in any position, and below the level of the parts to be oiled.

In this case either the oil is forced through the pipes by an automatic force feed pump worked by the engine, or part of the exhaust gas is diverted through a non-return valve into a reservoir, maintaining a pressure on the oil of 2 to 4 lbs. as may be required.

The pressure of the circulating water is sometimes used for the same purpose.

Grease Lubrication.—I find the Stauffer grease lubricators (Illustration E) are very efficient for bearings, such as the half-time shafts, pump and fan spindles, or in positions where liquid lubricant could not be maintained.

ILLUSTRATION E.

Silencers.—All internal combustion motors are fitted with a device to silence or muffle the noise made by the exhaust gases as they pass out at the end of the explosive stroke (see Illustrations F and G).

It is not essential to the efficient working of the motor, and if not properly designed may set up a back pressure.

A perfect silencer should muffle all exhaust noises without setting up any back pressure whatever.

The studs are arranged along the tube in the form of a spiral of any appropriate pitch, and pass diametrically across the tube with a convenient distance between them.

The gases are caused to pass from the exhaust pipe of the engine into one or more pipes having studs as above described, and are afterwards delivered into an expansive chamber or chambers from which they pass into one or more studded tubes before escaping to the atmosphere.

Another form of silencer (Plate XLIX., Fig. 2), which is very light and compact, and which can be readily opened out for cleaning and repairs.

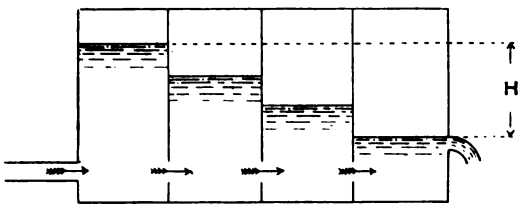

ILLUSTRATION F.—ILLUSTRATING THE ACTION OF THE BAFFLE PLATE SILENCER.

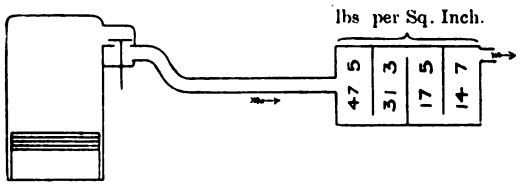

ILLUSTRATION G.—SHOWING PRESSURE OF EXHAUST GASES IN SILENCER COMPARTMENT.

It will be observed from the drawing, which is a sectional view of the complete silencer, that a spiral path is first provided for the gas to pass through, after which it passes into an expansion chamber, which is divided at its centre by a perforated wall; the gas then passes down a second spiral path exactly similar to the first, before escaping to the open air.

Nothing adds more to the pleasure of motoring than a quiet car.

The Flywheel.—It is necessary to have a flywheel to absorb the power for the period in the cycle for which no fresh impulse is given.

In large cars it is usually a combination with the clutch.

Its weight depends upon the shaft speed and power of motor, and should be in the rim.

Clutch.—Passing to the clutch, which is usually interposed between the engine shaft and the transmission system, the friction type of clutch is the one most extensively used in motor car work.

The conical patterns (Plate L., Figs. 1, 2 and 3) are very general. The flywheel of the motor is usually coned to receive

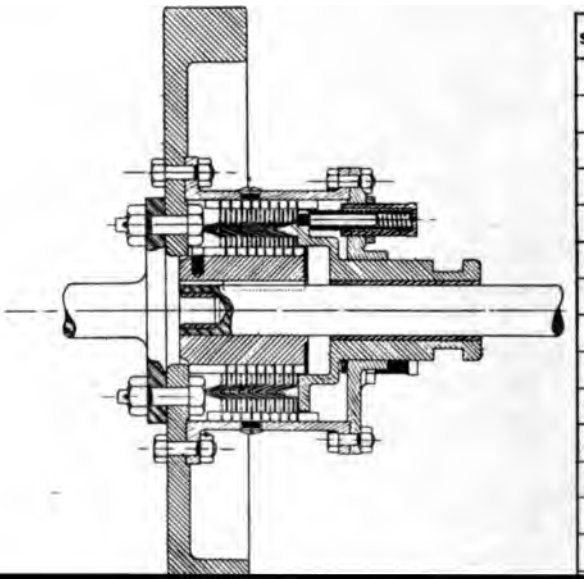

SIZE	B.H.P	REVS PER MINUTE
1	6	800
2	10	"
3	12	"
4	16	"
5	20	"
6	24	"
7	30	"
8	40	"
9	60	"
10	80	"
11	100	"
12	120	"
13	150	"
14	200	"

Mercedes Car Clutch.—In the Mercedes car, a coil clutch is used (Plate L., Fig. 4). In this clutch the gripping action is obtained from the automatic tightening action of a spring steel coil upon either a parallel or a conical steel drum.

It is important with all clutches that there should be no end thrust on the engine or gear box bearings.

A satisfactory clutch is one of the most difficult things to secure.

The ordinary type of cone clutch, which is covered with leather, can rarely be maintained in a normal condition, for the following reasons:—

A great command over the car, especially in driving through traffic, is secured by allowing the clutch to slip.

When the slipping has been going on for some time the clutch will not grip at all, or it grips violently or harshly. The result is that driving is not only most unpleasant, but is very injurious to the car itself.

Hele-Shaw Clutch.—To allow for this slip a clutch has recently been devised by Prof. Hele-Shaw (Illustration H) and consists of a series of plates alternately attached to the pair of shafts, each plate being formed into the fustrim of a cone of a sharp angle. These plates are well lubricated and are held into contact by a spring. Provision is made for cooling, and it is claimed that this clutch may be allowed to slip continuously without injury to the rubbing surfaces.

Speed Gear.—The gear box, after the engine, is a very important part of the car, but has been a weak link in a good many. When correctly designed and constructed of the right material it should give no trouble whatever.

All kinds of devices have been made to obtain a variable speed ratio between the engine and road wheels, but the Panhard system is one of the most popular (Plate LI.). It consists of two sets of gear wheels of different diameters. One set is rigidly fixed to the shaft they drive, whereas the other set, driven from the engine, is movable by means of a lever under the driver's control, and allows each gear wheel to be slid into mesh sideways, with a corresponding gear wheel in the fixed set, thus providing various speed ratios.

The gears are enclosed in an aluminium oil-tight case which is filled with grease or oil,

The disadvantage of the Panhard system is the liability, not only of novices but also skilled drivers, to miss their gear, *i.e.*, they do not make the desired change when they endeavour to do so, and have to come down to a lower gear than that required. This usually happens on an uphill grade.

With most forms of sliding gears it is necessary in changing to pick up any intermediate gear that may come before the desired one. For instance, if when running on the fourth speed it is necessary to stop for any reason, such as the traffic or a restive horse, etc., and it is necessary to get into the first gear to start again, the driver has to get into his third gear, then out of that into his second, then out of that again into the first, in some cases a most troublesome proceeding.

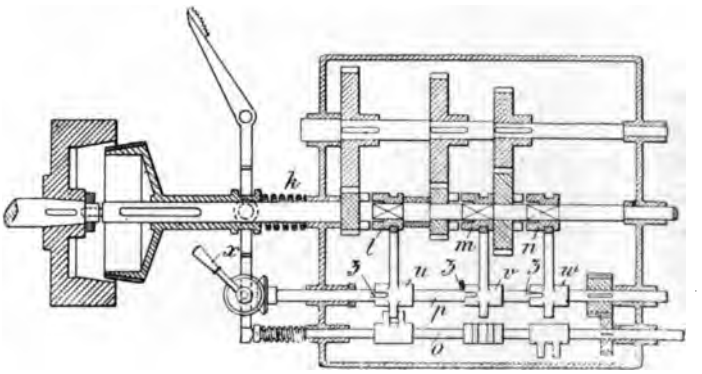

ILLUSTRATION I.

[redacted]

the selection of another gear wheel by turning the change speed handle, *x*. This change speed handle, *x*, turns the rod, *p*, through the bevel wheels, and this rod turns the shaft, *o*, by means of the gear wheels shown on the right. This causes one of the three double fingers, which are fixed on the shaft, *o*, at different angles to one another, to pick up the tail of one of the sliding forks, *u*, *v* or *w*. When the pedal is released and rises, the spring presses the shaft, *o*, to the left and, through the medium of one of the forks, *u*, *v*, *w*, which has been picked up, slides its jaw clutch, *l*, *m* or *n*, to the left, thus clutching its gear wheel to the shaft.

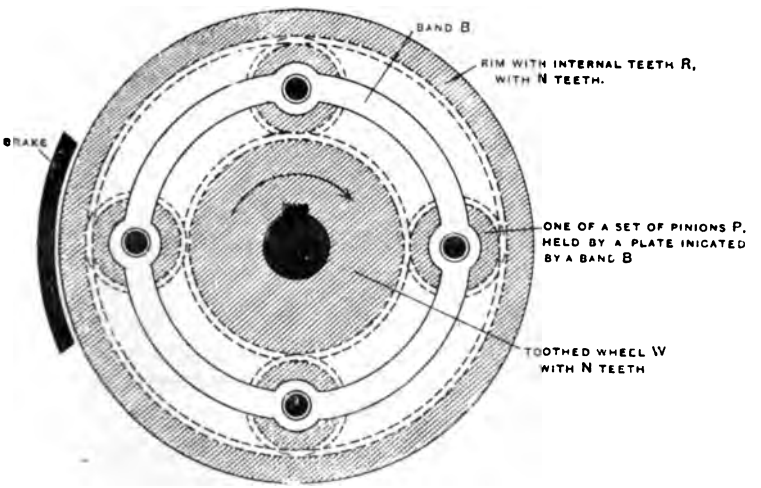

ILLUSTRATION J. - DIAGRAM OF EPICYCLIC CRYPTO GEAR.
(O'Gorman Motor Pocket Book.)

In the diagram of the fork, *u* is shown to be picked up, and as soon as the pedal is released it will make the jaw clutch, *l*, engage with the shaft, *k*, thus giving a direct drive, this being the drive on top speed.

The shaft, O, when the main clutch is in, is locked out so that the jaw clutch in use is held in position by means of a trigger (which is not shown) and is not dependent on the spring.

The pins and slots, *z*, on the rod, *p*, prevent the handle, *x*, from being moved, except when the pedal is fully depressed, and also prevent any but the selected gear from being engaged, the handle and all gears not in use being definitely locked except

when the pedal is depressed. In order to avoid complicating the diagram, the reverse has not been shown, neither does the positive locking arrangement appear.

The system is of course applicable to more than the three speeds, and is arranged for either gear driving with a live back axle or for chain driving.

De Dion Gear.—In the De Dion 1904 system all the gears are in perpetual mesh, with the exception of one in the first motion set, which effects all the changes as it is moved by its sleeve, which moves with the shaft. All rotate freely on their bearings except this gear and the second speed gear on

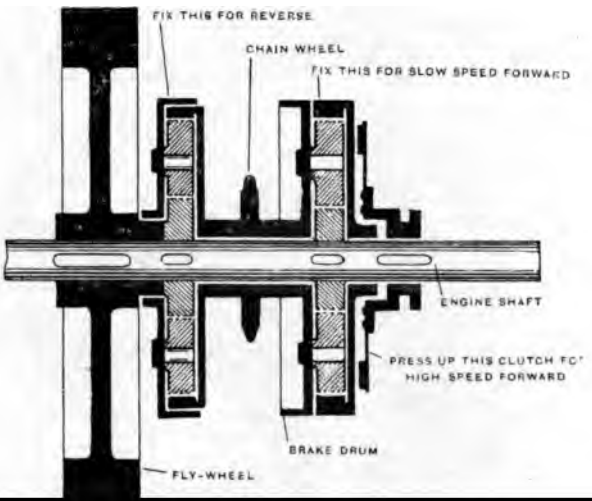

In one of these—the system is more or less the same for all in fundamental principle—the internally-toothed ring of the epicyclic train is held in a band-brake clutch, thus causing the inter-gearing planets to drive the opposite shaft at a low speed—that of its "sun"—while for the higher speed the whole mechanism is rotated as one by a common clutch to one or both sides of the device.

ILLUSTRATION L.—NEW OLDSMOBILE GEAR BOX

For the reverse a similar band-brake clutch holds the opposite side and the drum shaft is thus rotated the other way.

Differential Gear.—The differential gear appears to mystify most people, and is one of the least generally understood parts of the power-transmitting mechanism of a motor car.

In a car having side chain drive this gear is situated in the counter-shaft carrying the sprockets. In a gear-driven car it is usually located at the centre of the live back axle.

Its object is to vary automatically each driving wheel's relation to the other, according to the requirements of the moment.

The car never proceeds far in a straight line, but is, either owing to turns in the road or the necessity for avoiding traffic, constantly describing a series of curves. Now it can be easily seen that the wheel, which for the time being is on the inside of the curve, has a shorter distance to travel in a given time than its fellow on the outside, and consequently requires to run at a slower speed, or, like the man at the inner end of a rank of soldiers when wheeling, to "mark time." Where both wheels are rigidly connected and unable to turn independently, one or both must slip on the road surface, to the destruction of the tyres and the discomfort of the passengers.

Crypto Differential.—The differential gearing of the earlier type is known in the motor world as the crypto (Illustration M). It consists essentially of a ring or drum on which are mounted two or more pinions which mesh with wheels carried upon the inner ends of the two shafts which it is desired to balance, the power being applied to the drum by any suitable means.

Bevel Wheel Differential.—Illustration N shows two views of a balance gear composed of bevel wheels, and Illustration O, one composed of plain spur wheels, AA, straightened out to form racks.

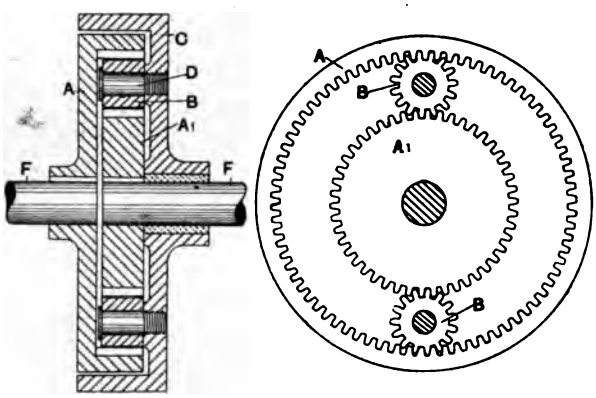

ILLUSTRATION M.

Now suppose that both racks are free to move in either direction, the power to be applied to the pin on which the pinion is mounted, in the direction of the arrow, X, both racks will move forward in the same direction, and so long as the load on each rack is the same they will maintain their relative positions with regard to each other.

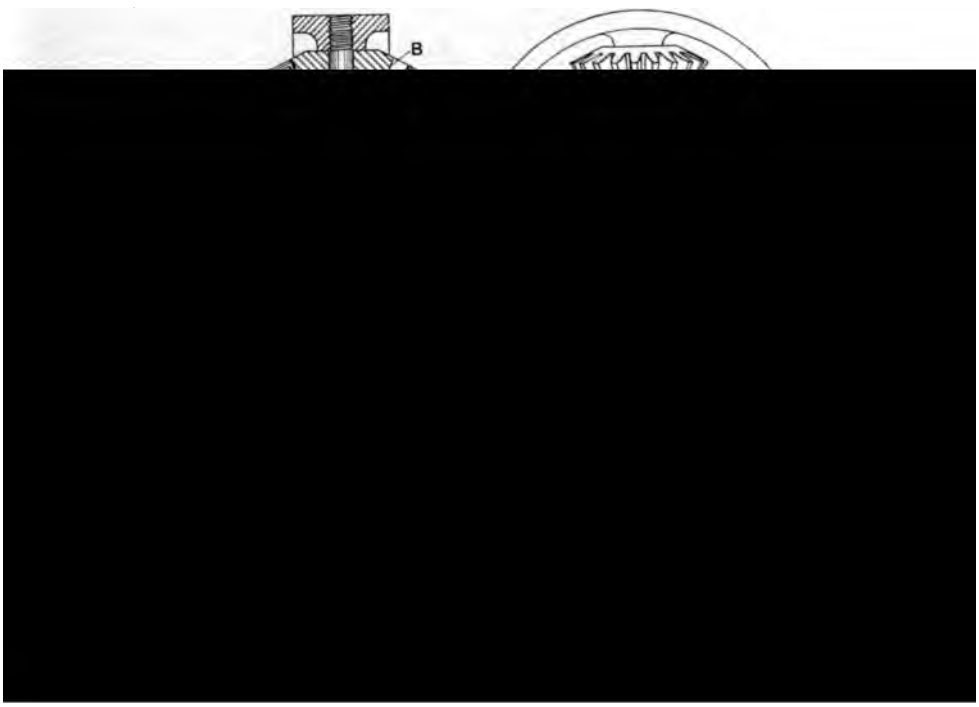

In the case of a balance gear fitted to a car, the directing fect is produced, of course, by the friction of the tyres upon ıe road.

Live Axle.—There is a diversity of opinion as to the limit ' power that can be transmitted by means of the live axle.

Some interesting discussions often arise with regard to the lative advantages of bevel gear-driven live axles and fixed ɪles with sprocket wheels and chains.

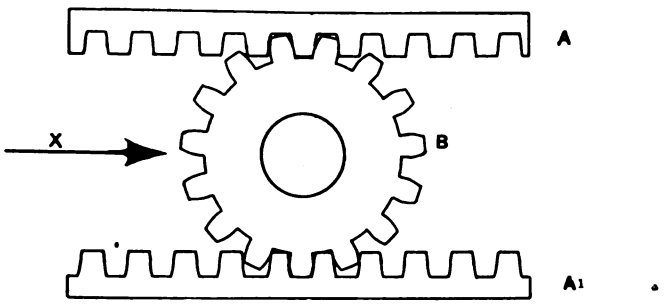

ILLUSTRATION O.

The former are only fitted on cars of moderate power and ɜight.

Illustration P shows a typical live axle in section.

AAAA is the axle made in two halves and to the ends of hich the wheels are keyed. The two halves are connected by e differential ar casing, B, hich has the ·iving bevel ıeel, C, mounted its periphery. is the driving ıion. EEEE are ɜ ball bearings, which the shaft, A, revolves. FF are the tie rods in tension to ·engthen the axle and prevent its bending upward. GG are the rings which connect the axle with the frame of the car.

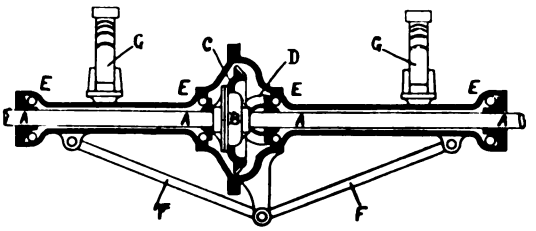

ILLUSTRATION P. -LIVE AXLE.

Brakes.—Next to trustworthiness in axles, wheels and steer-g gear, the brakes are of the utmost importance. They should · made double acting, *i.e.*, they should hold the car from oving either forward or backward on application.

They should also be designed so that when the car is loaded the action of the levers should not in any way be disturbed.

I have known cars whose brakes failed to act if carrying a full complement of passengers, which, to say the least of it, is decidedly awkward.

A foot-applied single brake is usually fitted on the counter-shaft, and a double-acting hand-applied brake acts on the back wheels.

The counter-shaft brake is much more used than the sprocket brake on the wheels, and there is a great tendency to depend on the former alone and chance the latter being in order.

ILLUSTRATION Q.—PORTION OF CROSSLEY FRAME, SHOWING INTERNAL BRAKE.

This practice should be condemned. As a matter of fact the hand brake acting on the back wheels is the one that should be used for general purposes, because it causes less strain on the car.

Double-acting brakes are now fitted with a pair of metal

ar, and at A and B short angles AC and BD on which the heels revolve are pivoted. These axles have arms, AF and E, rigidly forged with them, or otherwise attached, and at ich an angle that if AF and BE be produced, they will meet a common point in the centre of the rear axle.

The extremities of these arms, F and E, are connected by rigid rod, FE, so that the distance between F and E is at all mes constant. Motion is produced either by a lever pivoted t some point, S, on the angle, and engaging with the distance od, FE, at some point, G, or by a second arm, such as BP, ttached to one of the short steering axles, which is operated

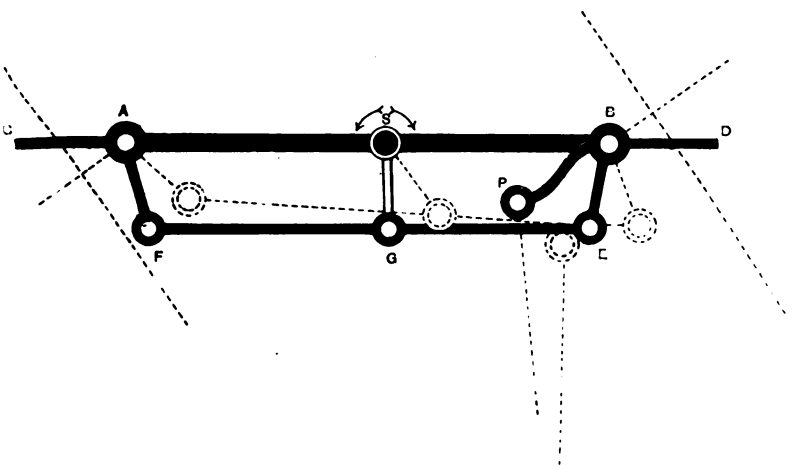

ILLUSTRATION R.—ACKERMANN SYSTEM OF STEERING.

a second distance rod. This last is the method usually emoyed on anything but the lightest cars.

Sometimes the polygon, AFEB, is made outside the axle stead of behind (Panhard system). The arm, SG, has been placed by a V-shaped one having two pivots at the end of e V, and many other attempts have been made to construct link motion between the axles that will give more correct sults than that illustrated, but so far the result has been all in comparison with the extra complication and expense volved.

Irreversible Control.—It is, above all things, necessary that e steering of an automobile be steady, and, in order that this

steadiness may be obtained, some device must be employed which inequality of road surface will not affect. This is obtained in practice by employing a worm gear for operating the steering

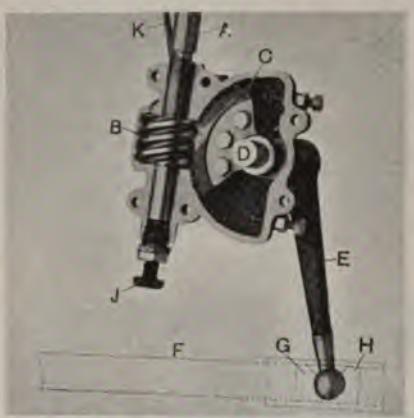

DETAILS OF THE DAIMLER STEERING.

A, steering column.
B, worm rotated by A.
C, segment engaging with B.
D, shaft carrying C.
E, steering lever connected to D.
F, steering rod.
G and H, segmental blocks embracing the ball end of E.
J, adjusting screw.
K, lubrication pipe.

ILLUSTRATION S.—DETAILS OF DAIMLER WORM GEAR FOR STEERING ARM.

arms attached to the axles of the front wheels. The irreversibility of the worm gearing provides against shock being carried back to the driver, and at the same time, the screw action of

ILLUSTRATION T.—VIEW SHOWING CONTROL HANDLES AND PEDALS IN THE OLDSMOBILE CAR.

the worm provides a powerful control over the direction of the wheels.

Illustration S shows a standard arrangement.

Tiller Steering.—For light cars it is not always deemed necessary to employ such a complicated arrangement, and tiller or side lever steering is fitted.

Tiller steering (Illustration T) is effected by a lever in the centre of the foot-board of the car, and is operated in the same way as the steering of a boat.

With side lever steering, the steering lever is pivoted horizontally from the side of the driver's seat, and provides considerable leverage in a favourable position for the application of power.

Steering Pivots.—An important point in the design of a steering gear is the way in which the steering axles are pivoted to the front axle of the car.

Illustration U shows three types: (*a*) is the type usually employed on heavy cars. The axle has a head forged on it, bored out vertically with a slight taper. The steering pivot takes the form of a vertical pin of corresponding taper, and fits the bore, the weight being taken either by a ball bearing at B, or by a set pin in the crown of the axle. This method is good and safe for heavy cars since it provides an ample bearing surface for the pivot, and nothing short of the fracture of an axle will disarrange it.

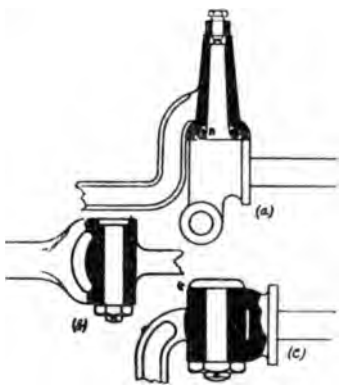

ILLUSTRATION U.—METHODS OF PIVOTING STEERING AXLES.

Illustration U (*b*) is used chiefly on small cars. The axle is forked, and the steering pivot connected to it by a pin passing through both the steering axle's centre and the arms of the fork locked at the bottom by a pinned nut. This method is also very good for light weights, but there are some modifications of it having the ball cones top and bottom, and no pin, that are distinctly risky practices.

The third method, Illustration U (*c*) is that employed on the Mercedes cars, and in this case it is the steering axle that is forked, and the fixed axle that forms the centre of the hinge. A pin passes completely through the pair.

This method has been the subject of much comment, but appears to be satisfactory.

Chassis.—Now as to the construction of the chassis (Illustration V).

The object of the designers is to reduce weight as far as possible, consistent with retaining a large margin of safety.

Frames.—The frames are built up in a number of ways.

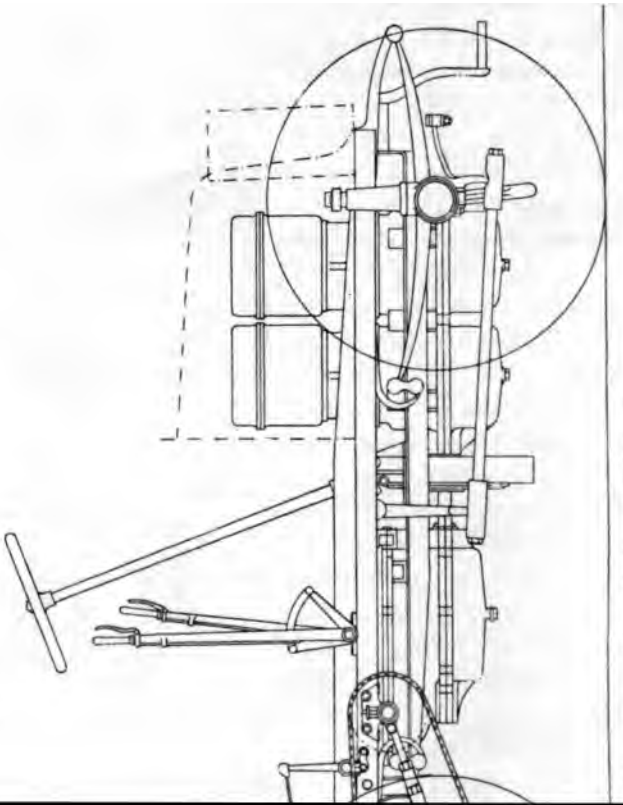

ILLUSTRATION V.—ELEVATION OF CHASSIS.

(*b*) As described, but armoured internally with ash, which ·eatly increases the construction with very little weight.

(*c*) Built of ash and armoured on both sides with steel 'tches with channel steel arms or cross-pieces.

(*d*) Tubing frames screwed into joints which also make joint ith cross-pieces and stays.

(*e*) And lastly, the one-piece pressed eel frame, perhaps the strongest and ghtest of them all.

With regard to the wheel base, the nger this is, the steadier the car, and ıe greater security from side slips.

Greater care must, however, be paid ı securing sufficient strength on ·count of the extra length.

Springs.—The springs of a motor car ıry very much with the different ıakers (see Illustration W).

Those designed to run on solid tyres ıould have specially designed springs: they are not of sufficient strength ıey are liable to breakage due to the lditional road shocks.

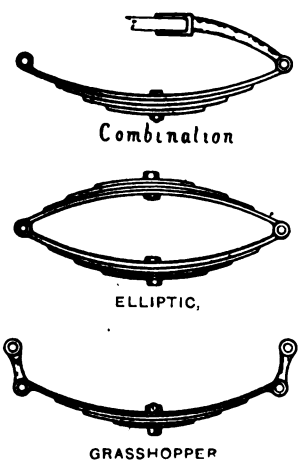

ILLUSTRATION W.—TYPES OF SPRINGS: COMBINATION, ELLIPTIC, GRASSHOPPER.

Cars can be made, and are being made, to run on solid tyres ith comfort, and I feel confident that such cars will be the eans of making motoring both practical and economical.

Springs for Solid-tyred Cars.—It is useless simply buying standard pattern car and fitting solid tyres to it.

Makers of pneumatic-tyred cars have counted too much on ıe tyres for shock-absorbing power, consequently they are uch under-sprung.

The springs should be designed to swallow and conceal the equalities of the road, and should rapidly absorb the work ıne on it while moving rapidly under the force applied to ·nd it.

They should not oscillate much after each road "bump" ıs passed and should be deflected through half their working istance when fully loaded.

Springs are being made much longer now, which is a distinct nprovement,

The frame of the car should be slightly higher at the back from the road than the front end, so that when fully loaded the frame should be parallel with the ground.

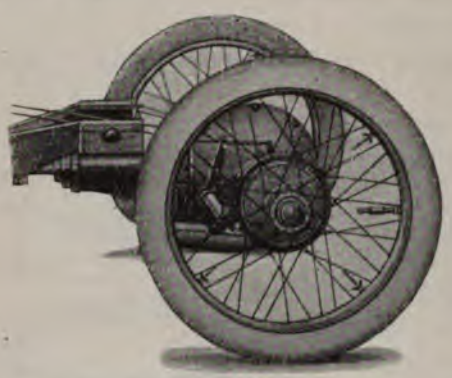

ILLUSTRATION X[1].—ROVER CAR WIRE WHEELS.

Fixed Axles.—These are used both front and back for cars driven by side chains, which, for heavy cars, are invariably used.

The H-section forgings are becoming the most popular pattern (see Illustration D, page 126).

Wheels.—For small light cars wire wheels (as on Illustration X[1]) are quite as strong as, if not stronger than, artillery wheels (Illustration X[2]). For heavy cars the latter are preferable because of their combined strength and resilience.

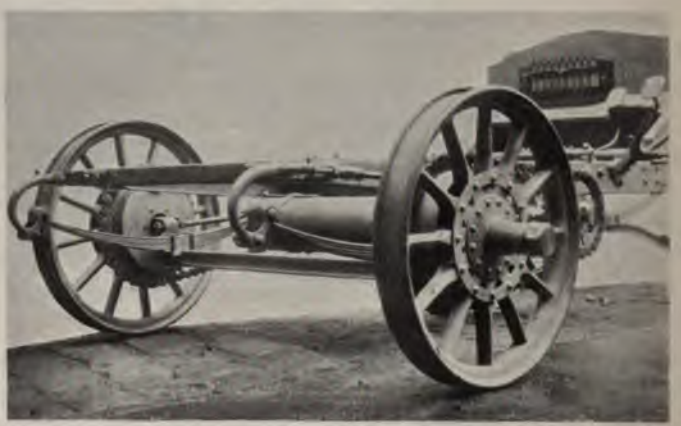

ILLUSTRATION X[2].—ARTILLERY WHEEL.

All the wheels should be of the same size, because the same tyre will then fit any wheel.

Light pattern pressed steel disc wheels for solid rubber tyres, such as Illustration X[3], are being used for motor omni-

buses, delivery vans, light motor wagons up to 2 or 3 tons carrying capacity, and heavy touring cars.

They are recommended for their strength, lightness and durability.

The embossed steel disc wheel, as shown in the second illustration, is coming into use for light motor passenger vehicles. Owing to their construction they give considerable lateral strength together with a minimum weight, and their chief advantage over the artillery wheel is durability, shrinkage being quite impossible.

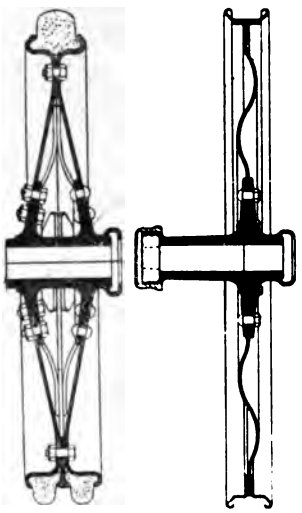

ILLUSTRATION X³. —PRESSED STEEL DISC-ROAD WHEELS, SUITABLE FOR SOLID OR PNEUMATIC TYRES.

Bearings.—The types used for motor cars are plain, roller and ball. There is still a diversity of opinion amongst makers as to the best.

Plain Bearings.—For heavy cars excellent results without risks can be obtained from plain bearings constructed of phosphor or manganese bronze.

Roller Bearings.—Roller bearings are usually fixed on back live axles and give good results.

Ball Bearings.—With ball bearings there is always, in my experience, a certain amount of risk of a ball breaking and playing havoc with its cone and journal, especially in a wheel hub.

Probably the design has got something to do with it.

The Hoffmann ball bearing (Illustration Y) claims to be scientifically and mechanically correct in this respect.

They provide for the load being taken in each case at right-angles to the axis of rotation of the ball, and have two rows of balls to take the thrust and two rows to take the journal pressure.

There is no doubt ball bearings reduce the power required to drive a car and are very suitable for high speeds, and can be applied with good results to thrust and shaft bearings. They give great freedom from friction with a minimum of lubrication.

Tyres.—This is a subject which, to do justice to it, should have a paper to itself, but it will be sufficient for me to say that in choosing tyres, whether pneumatic or solid, get them big enough and get them good.

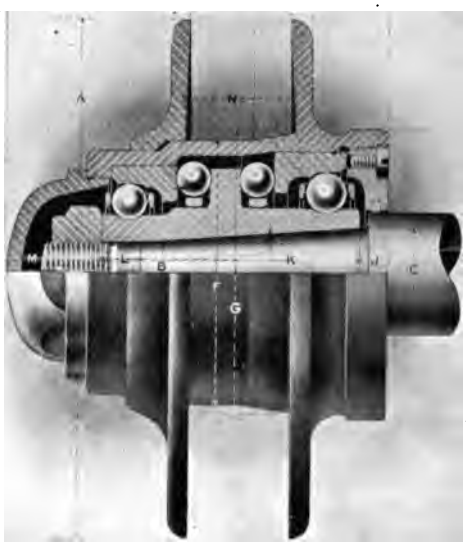

ILLUSTRATION Y.—HOFFMANN BALL-BEARING HUB.

I daresay many of you have had trouble in refitting inner tubes.

The Sirdar Rubber Company have apparently got over this difficulty with their U-shaped inner tubes (Illustration Z^1, Z^2).

This is vulcanised to naturally assume this shape, and in consequence, the operation of inserting the tube in the tyre is much simplified, because the lower semi-circumference automatically keeps itself out of the way of being nipped, and it is

With regard to the care of pneumatic tyres. They should be kept in a temperature of about 60 degrees in a dark place, and out of a draught, and should never be exposed to the rays of the sun before they are used (the sun has not so much effect upon tyres after use); if they are, they will lose their elasticity and become brittle, and small cracks will appear, which will gradually grow larger. Immediately after use pneumatic tyres should be cleaned from wet and mud, and cuts in the cover should be closed, so as to prevent water getting in and rotting the canvas, which is the cause of so many burst covers.

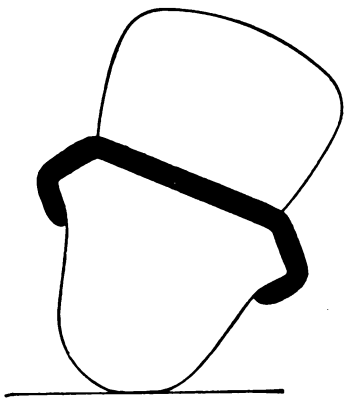

ILLUSTRATION Z^3.

Oil or grease should not be allowed to get on the rubber as it destroys the nature of it.

The pump for inflating the tyre should always have a pressure gauge upon it, and the tyres should be pumped sufficiently hard if they are to last any reasonable length of time; on voiturettes about 50 lbs. to the square inch; on light cars about 75 lbs.; and on heavy cars about 100 lbs.; and racing motor car tyres are frequently pumped to about 120 lbs.

A good deal of dust nuisance is caused by tyres being ridden too slack, owing to the extra suction of the road.

Solid tyres do not raise half so much dust, are much better hill climbers and not so liable to side slip.

Twin solid tyres are being used with great success on commercial motor vehicles (see Illustration Y).

Attention should be given to the design of solid tyres.

They should fit the rims snugly, or friction and chafing will destroy the base of the rubber.

The section recommended is shown in Illustration Z^3.

If I might have your attention for just half a minute longer, I would like to explain these two diagrams (Figs. 1 and 2, Plate LIII.).

Mr. Holden Stone has written me saying that I should really draw your attention to what he considers to be the coming valve in petrol engines. The illustration shown is the Selbach single

valve. It is a combination of inlet and exhaust, actuated by one single lever cam and rod.

In the first view it shows the exhaust valve position. You will note the cam is lifting the rod slightly, the motion is transmitted to the rocking lever which is pushing the collar down with it to allow the exhaust gases to go through; and in this inlet view, it is pushed still further down and closes up the exhaust port and opens the inlet port, so that the gas from the carburettor passing through, tends to cool the exhaust port.

There is another type known as the Baileul, but in either case the construction is such that one valve only per cylinder is used, acting alternately as inlet and exhaust valve.

This is certainly a radical departure from general practice.

In conclusion, it has been my endeavour, for the first Motor Car paper before this Institution, to treat it in a popular way, avoiding as much as possible technical details. There are many omissions which I have no doubt will be brought out during the discussion.

I must also take this opportunity of thanking your Secretary for the kind assistance he has given me in the preparation of this paper, and also the following firms and gentlemen, for supplying the necessary blocks, illustrations and information, without which it would have been impossible to make this subject clear:—Messrs. The Albion Motor Car Company, *The Autocar*, *The Automotor Journal*, Mr. Stanley W. Andrews, Mr. Holden-Stone, Mr. Mervyn O'Gorman, Messrs. The Hele-Shaw Patent Clutch Company, Messrs. The Hoffman Manufacturing

rising is to thank the writer for the most interesting and valuable paper he has given us and for the lantern slides, which in themselves are a most valuable acquisition to this paper, showing very distinctly the details of cars which are so valuable to many of us. I propose at our next meeting to enter into the discussion of this paper more fully.

Mr. J. H. Barker said—I should like your permission to show two lantern slides of the practical applicability of the petrol motor car to railway work. The North-Eastern Railway Company have recently adopted petrol for locomotive purposes, but they have complicated it by the addition of an electric dynamo. How far this will be successful remains to be seen, but it is certain that the weight of the petrol electric car is as great as the steam motor car. The cost of construction is also more, and the cost of upkeep will certainly not be less. To its credit it must be said that it dispenses with the use of one man, which is equal to a capitalised value of £1,200. The Great Northern Railway Company have gone a step further, and have adopted the petrol engine to directly drive the car itself. My firm has been asked to report on the adoption of a cheap passenger service on a light railway, and from particulars supplied to me by Messrs. Dick, Kerr & Co., it promises a very hopeful solution of the difficulty. Plate LIV. shows the car. It is mounted on four wheels. It weighs only 16 tons, and carries 32 passengers, against the petrol electric car with a weight of 35 tons carrying 48 passengers, which is distinctly to the credit of this firm's car. It is also sufficiently powerful to drag a horse box, cattle truck, or goods waggon where it is used for service in an agricultural district. Plate LV. shows the body of the car removed, and you will there note that the frame and the engine are mounted directly on to the axles within the wheels, which first of all enables the upper part of the car to be removed and renders the machinery available for inspection and repair. It further obviates the great drawback to motor car work of all descriptions in that the vibration of the engines is not transmitted to the springs and does not set up oscillations in the car body. There are two engines of the standard Daimler pattern, each of 36 horsepower. The power is transmitted to the main axles through bevelled gear, and there is differential

gear to prevent the overrunning of one pair of wheels over the other in the event of their becoming uneven through wear. The car can be driven by a single man, and if the ideal of the North-Eastern Railway Company can be attained, having one class and one fare, this man will be able to fulfil the multiple offices of fireman, driver, guard and booking clerk.

The PRESIDENT said—Perhaps I may say with reference to the North-Eastern Railway, that I believe so far as their experiments have gone, they find at the present time, for heavy work, that petrol is not so economical as the use of steam. I hope, however, that some device may be arrived at by which, in time, petrol may be utilized to better effect for heavy work, such as taking agricultural produce from country parts into the railway system, so as to get it into the great centres of population. I may say that I was over in Paris at the Automobile Exhibition this year, and there were several very nice-looking waggons run with petrol for the purpose of carrying produce, and there was also an ingenious arrangement of a petrol engine which dragged a number of trucks after it for the purpose of taking produce from a large dairy into the town. I am sure we have all listened with very great interest to-night to the paper we have had read, and I think it would be of very great interest if, when the discussion comes on, some comparison may be made between the uses of petrol and steam for motor car work.

The meeting then dissolved.

'ORTH-EAST COAST INSTITUTION OF ENGINEERS AND SHIPBUILDERS.

TWENTY-FIRST SESSION, 1904-1905.

PROCEEDINGS.

IFTH GENERAL MEETING OF THE SESSION, HELD IN THE LECTURE THEATRE OF THE LITERARY AND PHILOSOPHICAL SOCIETY, WESTGATE ROAD, NEWCASTLE-UPON-TYNE, ON FRIDAY EVENING, FEBRUARY 24TH, 1905.

R. H. MUIR, ESQ., VICE-PRESIDENT, IN THE CHAIR.

The VICE-PRESIDENT (Mr. R. H. Muir) said—I am sorry to ıy our President is away from home at present, and so I have een called upon to take the chair in his absence.

The SECRETARY read the minutes of the previous meeting, eld in Newcastle-upon-Tyne on Friday, January 20th, 1905, hich were confirmed by the members present and signed by the hairman.

The CHAIRMAN appointed Mr. David Andrew and Mr. James larr to examine the voting papers for new members, and the ollowing gentlemen were declared elected:—

MEMBERS.

Bell, James W., Gas Engineer, Tyne Dock Gas Works, South Shields.
McCulloch, T. M., Shipbuilder, 13, Heaton Road, Newcastle-upon-Tyne.

GRADUATES.

Bland, T. E., Apprentice Engineer, 4, Normanby Terrace, Gateshead.
Dearlove, T. M., Apprentice Engineer, 4, Normanby Terrace, Gateshead.
Sedcole, W. J., Apprentice Engineer, 6, Barker Terrace, South Shields.

THE APPLICATION OF ELECTRICITY TO INDUSTRIAL PURPOSES.

The CHAIRMAN said—The first items on the agenda are the discussions on the two papers previously read, but as Mr. Snell, who is to read a paper on "The Application of Electricity to Industrial Purposes," is very anxious to catch a train to Bristol, we have agreed that that paper should be taken now, and we will take the discussions afterwards.

Mr. JOHN F. C. SNELL, M.I.C.E., said—I have to thank you for kindly letting me take my paper first thing this evening. I would like to say that, in my own opinion, there is nothing new in the paper. It is really intended more as a nucleus for discussion, which I think will be useful at the present moment, in this district especially.

The discussion on Mr. Dickie's paper on the "Launch of the U.S.A. Cruiser 'South Dakota'" was resumed and closed.

The discussion on Mr. Frank Little's paper on "Petrol Motor Cars" was adjourned.

[redacted]

PPLICATION OF ELECTRICITY TO INDUSTRIAL PURPOSES.

By J. F. C. SNELL, M.I.C.E., Member.

[Read in Newcastle-upon-Tyne, on February 24th, 1905.]

Iany papers have been read during the last few years on this ect, and the author feels some diffidence in further discussing Yet, owing to the increasing use of electricity as an agent in ransmission of energy, and in its application to the driving of ıines in shipyards, engine works, collieries, etc., he may be sed for still further discussing so important an agent, which ı extensively used by members of this Institution. For ; are at least two very important points which have to be ; with constantly, in this district especially, and upon which ; is still a great divergence of opinion. These are as w:—

1. The comparative economy between installations (for the driving of machine tools) laid down at the works themselves, and the purchase of electricity from an outside power station owned by either a separate company or by the municipality.
2. The comparative advantages of direct current and alternating polyphase currents. (As the subject will be treated with particular reference to the North-East Coast, only three-phase alternating currents will be considered.)

urther, the author wishes to make clear two other matters h are of great importance to the management of these s:—

3. Their position, electrically, with respect to the Board of Trade and the Home Office.
4. The importance and economy of standardization.

he author as a member of the Engineering Standards nittee, now deliberating in London, may be excused for ng home this necessity for standardization, both in the

interest of users and manufacturers, and of the electrical and other industries adopting electricity for the transmission of power.

Thus it is hoped that a clear understanding will be arrived at as to the relation of independent electrical generating plant *versus* the purchase from a public source of supply . The author, though himself the servant of a municipality engaged in the supply of electricity for general purposes, including most important industries, will endeavour in this paper to hold himself entirely free from bias, and to give a plain unvarnished account of both sides of this question, whichever view may be supported by the actual results about to be given, and he hopes that a clear conception of the obligation of users and suppliers to the Government departments for the protection of employees and property may be obtained; and also that useful and standard data may be recorded for future application by works now adopting electrical driving, and which will, undoubtedly, be driven by this method in the future.

1.—Relative Advantages and Costs of Independent and Co-operative Generation of Current.

Through the kindness of certain distinguished members of this Institution, the author is able to record the actual results of electrical stations owned by two large shipyards, one of which is being partly driven by its own steam-driven plant, and partly from a town supply, these two systems being entirely separate from one another. The other example is that of a shipyard

The total capital outlay on this generating plant is £17,184, d the following were the working costs for twelve months, z.:—

	£	s.	d.
Labour (including 20 per cent. for working charges)	832	14	1
Coal, 2,924 tons at 11s. per ton	1,608	11	11
Feed water at 8d. per 1,000 gallons	59	0	6
Circulating water—make up	31	19	6
Oil	58	8	5
Repairs and general stores	141	2	10
Works costs	£2,731	17	3
Depreciation at 5 per cent.	571	13	2
Interest, 4 per cent.	457	6	2
Rent, rates and taxes, taken at 33 per cent. on the item for labour	249	16	2
Total costs	£4,010	12	9

us making a total cost per unit of 1·08d.

The second example is as follows:—

Number of gas engines, 3.
Total B.H.P., 360.
Dynamos, 3.
Total kilowatts, 225.
Belt-driven, shunt-wound, direct current, 230 volts.
Number of motors, 34.
397 total H.P. (Motors vary from 3½ H.P. to 44 H.P. each.)
Class of work, shipyard.
Maximum load observed, 207 kilowatts.
Total units generated during four months, 83,125.
Load factor: 14 per cent.
Cost of gas, 1s. 6d. per 1,000 cubic feet.

During these four months, the following were the ascertained s:—

Number of units generated during the four months' test = 83,395.

	£	s.	d.
Town gas, 3,000,828 cubic feet at 1s. 6d. per 1,000 feet	225	0	10
Engine and dynamo oil	24	1	7
Waste and stores	5	9	10
Repairs	5	16	8
Water	2	0	0
Labour	84	12	1
Interest and depreciation	60	0	0
	£407	1	0*

Cost representing 1·173d. per unit.

No account allowed for supervision, general establishment charges, or rating chinery.

From these two examples it will be seen that there is a variation in cost per unit from separately driven plant of respectable dimensions from 1·08d. to 1·173d.

It is only fair to point out that the average vacuum in the former case is only about 15 inches, and that the steam pipe lead is of some length, both of which are factors which must operate against the costs; thus the results would have been better had there been ample circulating water, and a better steam pipe range, or a moderate degree of superheat. Also, in the latter case it will be observed that the dynamos are belt-driven, which must account for probably at least 5 per cent. loss of power, which would be saved by direct driving. On the other hand, the plant installed probably represents the cheapest capital expenditure on account of the higher speed of the belt-driven dynamos.

The author has always contended that in works requiring from 300,000 to, say, 1,000,000 units per annum, and with a load factor of 20 to 30 per cent., the cost will be found to vary from 1·25d. per unit to 1d.; and he is of opinion that, looking at the question broadly and taking into due account an adequate depreciation of plant and average cost of upkeep for, say, a period of twenty years, 1d. is about the lowest limit for installations of the size stated. He is aware, of course, that there are special cases in which, either through an abnormal and excellent load factor, or through the utilization of blast-furnace gases, the cost is materially reduced below this figure. These, however, are quite the exceptions, and he affirms without fear

to works from outside sources. Whether it be a power company like the Tyneside Power Company, or a municipal works such as Sunderland, what will be said will be true of most stations, and may be considered as generally applicable to all.

The first and most obvious saving is in the capital outlay per kilowatt. The curve (Plate LVI.) gives the relation of the cost per kilowatt (one kilowatt = 1⅓ H.P.) between stations varying from 250 kilowatts up to 10,000 kilowatts.

Many independent plants do not exceed 200 kilowatts in extent, while the two power stations referred to have actually exceeded or are nearing the higher limit. Now, if, as the diagram shows, the smaller installation cost £45 per kilowatt installed (which figure includes buildings, boilers, engines, steam pipes, condensers, dynamos and switchboards completely equipped on the one hand; or buildings and gas-engines, water-tanks, dynamos and switchboards completely equipped on the other hand; and also includes, for obvious purposes of safety, spare plant representing probably some 50 per cent. of the capacity of the running plant), it is obvious that the 10,000 kilowatt station, costing about £20 per kilowatt, can afford to spend money outside the station in laying adequate cables and fixing the necessary transforming machinery, and yet be able to effect a considerable saving on the capital sum.

Secondly, it must be equally obvious that, while a decent load factor of anything between 15 and 35 per cent. even may be obtained in an independent installation, yet the combination of a dozen and, *a fortiori*, several dozen such works in one station must result in a far better load factor, which is actually in practice found to be anything from 45 to 55 per cent. This improved load factor at the resultant station is owing to the non-synchronism of the various maximum demands on the several works, which among station engineers is known as the "diversity factor." This diversity factor really has a high value. The author knows examples where the resultant maximum load at a generating station is only some 60 per cent. of the integrated total of the maxima. This, obviously, means that a given amount of plant installed at the power station is able to deal with a much larger total of horsepower of motors installed in various works than the same plant could possibly deal with if it were split up into a number of small independent installations.

As one is speaking to so many engineers who may not be specifically electrical, it would be well to define the term "load factor," as so much depends upon this, the most important detail after capital cost in producing economical results. The load factor of any plant, then, is the ratio of the actual units generated in any given time to the units which would be generated were the plant working continuously at full load during that time. For example: the number of hours in a year is 8,760; an installation representing 100 kilowatts, working continuously for 8,760 hours, would generate 876,000 units. If it is actually found that 219,000 units have been generated during the year, then the load factor of that plant has been $\frac{219{,}000 \times 100}{8{,}760} = 25$ per cent.

It must be clear to anyone that a steam dynamo of 100 kilowatts working continuously will cost less per kilowatt per annum than if only working more or less intermittently, or at varying loads, during a quarter of that time. Now this is another of the advantages claimed for general sources of supply, and is not based on mere hypothesis, but is actually proved from the results obtained, viz., the thereby increased load factor due to the supply given to several works, together with the practical diversity of their maximum loads, as before stated, enables the K.W. or the H.P. per hour (whichever basis be taken) to be more cheaply produced than if each works produced its own current.

The scale of prices upon which a power station may be reasonably expected to supply current is shown in the diagram (Plate LVII.). This scale is based upon the practical capital

are other economic reasons why works should, in most cases, purchase their power rather than instal a separate generating plant, viz., overtime shifts can be arranged without any trouble in the way of keeping special men for working treble shifts in the local power station; on holidays there would be no worry from having to light up boilers or start gas-engines, and having the machinery ready to run and no men turning in; the manufacturer is saved the capital cost of the generating plant, and the space which the generating plant would occupy has a great value for other purposes; and, further, he has not to trouble himself about antiquation of plant, or more efficient methods of generating electricity in the future. It will be granted that motors which are capable of working from 85 to 95 per cent. efficiency (according to the ratio of their load) will probably not be superseded by any more economical motor in the future. On the other hand the manufacturer is entirely dependent on an outside source of supply—and the transmission cables and transforming machinery introduce a further element of breakdown, which, though amply guarded against as far as skill will allow, *is* a factor which cannot be negligible. It behoves a manufacturer, therefore, to see that in becoming dependent on an outside power or supply station the cables should be duplicated, and an adequate amount of reserve transformers should be insisted upon.

From a comparison of the two diagrams (Plates LVII. and LVIII.) one gets the following results for outputs of 100,000 or more units per annum:—

Load Factor.	Units per K.W. Demanded.	Price from Power Supply.	Price from own Local Station.
Per Cent.		Pence.	Pence.
15	1,314	1·5	1·75
20	1,752	1·25	1·45
25	2,190	1·125	1·25
30	2,628	1·00	1·10
35	3,066	0·875	0·95
40	3,504	0·800	0·90
50	4,380	0·75	0·75
60	5,256	0·68	0·65
70	6,132	0·66	0·58
80	7,008	0·62	0·50

The deductions to be made from the diagrams referred to show that the higher the load factor of a particular installation,

the less reason is there for the purchase of power from an outside company, and the more excuse for installing one's own plant; and that at a load factor of 50 per cent. the costs are identical and that for load factors above 50 per cent. the power can be more economically generated on the spot. But as this only applies to exceptional plants, such as pumping or paper mills working continuously, and does not apply to engine works and shipyards having a load factor of under 40 per cent., the inference is that the greater number of works in this district will benefit from co-operation by becoming consumers of one general power supply.

2.—The Comparative Advantages of Direct Current and Alternating Polyphase Currents.

As to the merits of direct current and alternating polyphase currents. The advantages of the direct current are: variation of speed over a considerable range, without undue loss of economy, and with utmost simplicity; and in favour of the three-phase motor, the utmost simplicity of mechanical and electrical construction, the total enclosure of the motor, and absence of commutator and of any wearing parts other than the bearings, which are themselves negligible.

The costs and weights of motors are in favour of the three-phase type. The starting and stopping are quite as easily and as economically carried out, and the only objection which one can offer to the three-phase motor is its less easy variation in speed when compared with its direct current competitor.

It is true that the pressure of 220 volts direct current is reputed to be safer to persons than 220 volts alternating, but as fatalities have occurred in both cases, and equally, as very many

EFFICIENCIES OF ELECTRICAL MOTORS.

Three Phase Induction Motor – 220 v.				Direct Current Motor – 220 v.		
Horsepower of Motor.	Speed.	Weight.	Efficiency.	High Speed.	Weight	Efficiency.
		lbs.	Per Cent.		lbs.	Per Cent.
¼	1,375	45	67	1,600	100	67
½	1,410	80	76	1,550	150	74
1¼	1,420	100	82	1,450	180	78
2½	1,420	150	83	1,320	280	80
3½	1,425	210	86	1,280	365	82
7	1,430	340	86	1,250	560	83
9	1,430	520	87	1,100	700	84
11	965	750	86	950	1,100	84
18	965	850	88	850	1,320	85
25	965	1,050	89	750	1,570	87
30	965	1,300	89	720	2,740	89
45	720	1,700	90	640	3,240	91

Particular works must, of course, require particular application, and as the author is able to speak quite disinterestedly, he strongly advises manufacturers to pay the small additional expense incurred by the fees of a recognized electrical expert to advise them upon the application of electricity to their machines. It is lamentable to find (as the author has several times found) that many of the economies which ought to be rightly obtained by the application of electricity, and by the initial expense which it necessarily incurs, are largely discounted by the absurd methods by which motors are applied to their work. In some cases lines of countershafting are retained, so as to group a number of, sometimes, quite large machines driven by one large motor, running often at less than half load, or, in other cases, fans originally running at 200 R.P.M. are driven electrically at a much increased speed, and the necessarily increased power which the motors take up is a source of amazement to the manufacturer, who sometimes appears ignorant of the fact that as the speed increases, so the power required cubes. These are some of the practical mistakes which a professional consultant can and ought to be able to prevent. The adverse criticism which occasionally falls upon electrical driving, in the author's opinion, creates a real demand for experts of this class at the present juncture, when the tendency is so much towards the adoption of electricity as the driving agent.

The judicious grouping of motors or application of single motors to special tools, and the relation of their initial capital

cost to the general working expenses after their installation, is in many works a complicated problem, upon which it is submitted only one who has made a special study of such applications is competent to advise. It would be unfair to the general industries of the country if, when called upon to make the necessarily great sacrifices in scrapping their original methods of driving, and substituting a more efficient electrical motor, every care were not taken to adopt at once the most economical method in outlay, and the most efficient in practice afterwards.

3.—Position with Respect to the Board of Trade and the Home Office.

The regulations which are being imposed upon electrical users are somewhat confusing and complicated to the uninitiated, and the author thinks it will not be without use if he attempts to put concisely the obligations which users are placed under with respect to their employees by the regulations of the Board of Trade, and more particularly by the regulations issued under Section 79 of the Factory and Workshop Act, 1901, by the Home Office.

A works skilfully changed by a competent adviser from steam driving to electrical driving would, necessarily, be protected on all these points. At the same time, the author does not wish to frighten manufacturers, and is of opinion that through the regulations being misunderstood, many competent business men are chary of taking the step of changing over from one system to the other, believing that so many regulations

knowledge, especially with direct current, that if there be two conductors with a difference of, say, 250 volts between them, one of them (the negative) in course of time becomes approximately of the same potential as earth, due to dampness, particularly, and to an electrical effect known as osmosis, and then, of course, the other becomes charged at a pressure which is 250 volts above the earth potential; and therefore a person touching the bare portion of such a conductor would obtain a shock at this pressure. Such a shock, except under very special circumstances, is not in itself dangerous, but should there be in a shipyard, for instance, an electrical winch, subject to all weathers, and a workman standing on very damp ground were to grasp the naked part of the "live" cable or part of the machine, he would get a very severe shock, which might even have fatal results. But if such conductors be run through an iron pipe, or be surrounded by a lead sheathing, which is itself connected at points to waterpipes, or to other efficient earthplates, it is an absolute impossibility then for any person to obtain a shock of any kind. Now the cost of running cables under these conditions is very little more than running them by other less thorough means, and as they are protected from so rapid a depreciation as will occur if they are open to all kinds of weather, it really is more economical to make a thorough job of this cabling at the time of the installation. The author regrets to say that too little attention is given to this portion of the work, and would urge upon manufacturers the necessity in their own interests of insisting upon good materials and a complete metallic protection of the cables.

Then take another portion which is operated by all classes of workmen, viz., the controlling switch and starting gear of each motor. Now, in the case of direct current motors, this consists of a simple switch containing many contacts, between each of which is a resistance coil, which is in effect the stop-valve of an engine, and permits the motor to start away easily, and without undue shock or stress; or in the case of a three-phase motor, the even simpler starting switch with its complementary auto-transformer, consisting of a two way switch, on one side of which is connected a simple device for preventing a too big rush of current to the motor when starting from rest—a sort of bye-pass valve—and which is put out of action by simply throwing

over the switch when the motor has attained approximately its full speed. In both cases the handles of the switches should only be operative, or able to be touched by the workmen. The rest of the work should be screened by an iron shield, which should in turn be metallically connected to the iron pipe containing the cables. This is really very simply done by merely making the end of the iron pipe secure to the casing containing the starting switch by an iron nipple. Then, too, as the motor contains the electrical circuit, any part of which may possibly, though very improbably, come into contact with the iron framework, it is necessary that the motor frame should also be connected to earth.

If these three points be carefully observed, then it is absolutely impossible for any employee to obtain a shock. Moreover, in case of a fault in a cable, the fuse controlling that motor will blow, on account of the circuit made with the pipe, and, therefore, with "earth," causing a larger current to flow momentarily. The fault is then easily localized, and the machine restarted with a minimum loss of time.

The more care, of course, requires to be taken with respect to the lighting of workshops and offices, and particularly in the case of arc lamps in open yards. The author sees no objection in many cases to the use of overhead conductors, but then, of course, these will always be out of reach, and no harm can accrue from them. Where overhead conductors are used, however, it is advisable to guard against lightning strokes by fixing proper lightning arresters on the main controlling switchboard.

dividual circuits, each governing a group of tools. Tests ought to be insisted upon weekly, and the author suggests that a log book be kept in which the daily readings of the meters will probably be kept, and which should also contain a record of the weekly tests. By this systematic method, much annoyance may be spared the consumer, for weaknesses in any of the circuits are detected in time and put right, and consequent loss of time from machines lying idle will be averted. A simple testing arrangement, such as an ohmmeter and portable generator, costing under £20, will suffice, and is so simple in its application that an untrained boy can operate it and make the records necessary.

Alternating currents of the same nominal pressure as direct currents have to be more carefully guarded, for whereas the virtual or mean voltage is, say, 250, the actual maximum voltage is 250 $\sqrt{2}$, or 352 volts; so that a person getting a shock from an alternating current circuit of the same nominal voltage as a direct current circuit will be liable to a pressure of 40 per cent. more. Still, however, such liabilities can be made, and ought to be made, impossible, by adopting the simple expedient of a continuous metallic covering for all cabling, taking care to see that the covering is continuous; shielding the switches and starting gear; and earthing the motor frames. With these precautions there is not so much danger about an electrical system as there is from the belting of an ordinary counter-shaft. Any liability of fire is altogether removed in this way, providing that common sense is exercised in guarding each circuit at the distributing switchboard by fuses or automatic cut-outs. Here, again, it is advisable to make these instruments "fool-proof" by having fusible cut-outs supplied with stamped standardized fuses; otherwise, if a motor develops a slight earth, or is overloaded at times and blows the regular fuses, there is too much tendency to put in a piece of copper in place of a fuse, with the result that any safety-valve, as it were, to the system is blanked up.

The sooner manufacturers will agree in their own interests to adopt these simple precautions, the better for the industry, and the less likely we shall be to undue visitations from Government officials.

4.—THE IMPORTANCE AND ECONOMY OF STANDARDIZATION.

There is only one more point to mention, but one by which a manufacturer starting to electrify his works can save a good deal of capital outlay. Wherever possible, it should be the aim to group the machinery and tools in such a way as to adopt three sizes of motor, and let us say, for example, 30 H.P., 15 H.P. and 5 H.P. In this way a spare armature for each type of motor will probably be found to be sufficient, and thus the capital expenditure on spares will be considerably reduced.

It is quite true that a complication ensues in many cases from the variety of speeds at which tools have to be driven, but the author does not think that this is as bad as is made out, and in special cases, rather than instal a fourth size of motor, he would be inclined to modify the speed through gearing of some kind, even at the risk of some loss in efficiency. Then, the starting switches, the switchboard panels and instruments could be made, say, of two sizes to suit the three classes of motor, and thus there will be some system instead of the too frequent and too great variety of instruments one sees installed. In a system carefully laid out, the cables can also probably be arranged to be covered by two sections.

The arc lamps should be, if possible, of the same pattern, and the resistance or choking coils in connection with them should be of precisely the same pattern. Thus a very simple and easily understood system will be adopted with a resultant minimum first cost. If continuous current dynamos be installed, the adoption of the three sizes suggested can also be probably ar-

any case, with direct current installations, it is always advisable to have the motors compound wound, and in cases of intermittent work, such as with punching and shearing machines, as an extreme example, it is necessary to supplement the motor by a heavy flywheel. These are points, however, upon which it is advisable to get expert advice, and to enter into a discussion of the sizes of motors for various industries would require a paper in itself.

The author is confident that transmission in the future in workshops and other factories will be almost entirely by electrical means, and one important point he would ask users to remember is the quicker rate of doing work which frequently results from the adoption of electricity. He would ask manufacturers to look at the cost of their power squarely. There are too many instances of such figures as ½d. per horsepower hour, or less, being given, which, when analysed, are soon proved to contain merely the cost of fuel and stores—not the whole of the wages, and only a vague idea of the repairs, with no provision for depreciation of plant, rating, interest on capital outlay or general superintendence. He knows in many works it is difficult to arrive at a true assessment of some of these figures. That we have entered an era of the almost universal adoption of electricity, he is quite certain. At the same time, manufacturers should not hastily adopt the new method, but should take time in laying out their works to the most economical advantage.

The author hopes this paper will be instrumental in making clear the pros and cons for each particular user, and be of some assistance to non-electrical engineers, who are contemplating the adoption of electricity.

He has not entered upon the important question of the supply to collieries, which, under the admirable rules issued by the special Commission appointed by the Home Office, will render the use of electricity in mines thoroughly safe, but it does appear as if a very considerable economy could be gained, especially in these cases, through the adoption of electrical transmission. Several important collieries are now installing plant, and in a short time we shall have reliable data upon which to work.

Manufacturers are to be congratulated upon the manner in which they have so readily adopted this agent on the North-East

Coast, and electricity will, undoubtedly, play an important part in the economics of the district.

The recent regulations of the Home Office are appended to the paper and will be useful to members for reference. The author also recommends the study of the Report by the Commission on the Use of Electricity in Mines recently issued. The author is indebted to the Home Office and to H.M. Electrical Inspector of Factories for permission to use these references.

APPENDIX.

FACTORY AND WORKSHOP ACT, 1901.

DRAFT REGULATIONS FOR THE USE OF ELECTRICITY IN FACTORIES AND OTHER PLACES UNDER THE FACTORY AND WORKSHOP ACT, 1901.

Whereas the generation, transformation, and use of electricity in electrical stations and in any factory, workshop, dock, wharf, quay, warehouse or other place to which section 79 of the Factory and Workshop Act, 1901, is applied by that Act, has been certified in pursuance of the said section 79 to be dangerous:—

I hereby in pursuance of the powers conferred upon me by that Act make the following Regulations, and direct that they shall apply to all places named above, other than electrical stations, in respect of the distribution and use of electricity where the normal working pressure is greater than 250 volts

and from any regulating switch resistance or other device in connection therewith: provided, however, that where the arc lamps are connected in series across the outer conductors of a three-wire system and the pressure cannot exceed 250 volts from earth, it shall be sufficient if one such switch be provided for each series of arc lamps.

4. All switches and cut-outs shall be so enclosed and protected or be in such positions or of such construction that there shall be no danger of any shock being obtained in the ordinary handling thereof, or of any fire being caused by their normal or abnormal action.
5. All metal holders for incandescent lamps, the frames of all motors, and the metal casings of all wires, switches, fuses and cut-outs, shall be efficiently connected with earth.
6. Where the electricity is derived from a public supply the following conditions shall be observed:—
   (*a*) A suitable safety fuse or other automatic cut-out shall be inserted in each service line, as close as possible to the point of entry into the premises, and contained within a suitable locked or sealed receptacle of fire-proof construction, except in cases where the service line is protected by fuses in a street box, but no fuse or cut-out shall be inserted in the intermediate conductor of a three-wire system.
   (*b*) All service lines and apparatus shall be highly insulated and thoroughly protected against injury to the insulation and against access of moisture, and any metal forming part of the electric circuit shall not, unless efficiently connected with earth, be exposed so that it can be touched. All electric conductors shall be so fixed and protected as to be free from risk of electrical discharge to any adjacent metallic substance.

Provided that in regard to service lines and apparatus under the sole control of a person other than the occupier of the premises to which the supply is given it shall be a

sufficient compliance with Regulation 6 on the part of such occupier if he obtains from such person in the month of January in each year a certificate that the Regulation is fully observed in regard to the said service lines and apparatus. Such certificate shall be produced at any time when required by H.M. Inspectors of Factories.

These Regulations shall come into force on the 1st day of January, 1905.

One of His Majesty's Principal
Secretaries of State.

Home Office,
Whitehall, 1904.

DISCUSSION.

The CHAIRMAN said—I am sure you will agree with me that we have had a most instructive and interesting paper from Mr. Snell, and I propose if any gentleman is anxious to speak upon it while Mr. Snell is present, he should have an opportunity now. There is a gentleman present, Mr. Unwin, who is not a member of the Institution, but who has asked if he may take part in the discussion, and, if you agree, I will call upon Mr. Unwin for some remarks.

Mr. P. I. UNWIN (by permission of the Chairman) said:—It is quite a pleasure to have an opportunity of discussing a subject of the importance of that which Mr. Snell has brought before us

As Mr. Snell points out, the two reasons why electric power is so popular and economical at the present day are load factor and transmission losses. Transmission losses, with all forms of power except electric, are quite serious, as the power cannot be applied directly to the work. With electric driving the power can be applied directly to the machine just where and when it is required.

On the question of load factor, I have here some figures which are the result of a considerable amount of accumulated experience in electric driving of works on Tyneside. The total consumption of the few particular works in question is 5,700,000 units per annum. The load factor on engine builders and machine shops is 34·5 per cent., and it is noteworthy that these factories nearly all work a night-shift. The load factor of several great shipyards is 19·6 per cent. The names of these consumers are household words to everyone on Tyneside and throughout the civilized world. These figures are not estimates but actual tested results, and the figures given are a summary of an enormous amount of data. The load factor of the same machinery as mentioned above, driven by any other form of power, would probably be 70 per cent. in the one case and 40 per cent. in the other, owing to losses in transmission.

Mr. Snell gives certain figures in his table on load factors, stating the price from public power supply and from private generating stations, which are evidently the result of important data collected in a most scientific manner. The figures from private generating plants which are above 1d. per unit, 1·173d. and 1·08d. per unit, are most interesting and tally with the results of experience in other quarters. The figures, however, given, as taken from the public supply, are almost in all cases on the high side. To illustrate this, I need only say that the standard tariff of the Newcastle Electric Supply Co. is below all the prices per unit mentioned down to the 40 per cent. load factor. In load factors above 40 per cent. again, the Company's standard limited service tariff is below the figures given.

It should be borne in mind that high load factors at any works are extremely rare and are obtained in isolated cases only. When any business establishment is taken as a whole, the load factor is quite usually below 50 per cent. The figures of from 60 per cent. to 80 per cent. load factors are very special cases,

possibly an isolated pump, a textile mill, a paper manufactory, grinding machinery or industries of this kind, and most of these are readily met by the limited service tariff mentioned above.

Again, respecting capital cost, the necessary capital outlay for building private generating stations is, according to Mr. Snell, from £30 to £50 per kilowatt. In the case of an electric power company the figure Mr. Snell gives is £20 per kilowatt. From actual results obtained in the construction of Carville Power House, the total cost per kilowatt installed, including land for extensions (this, therefore, will be considerably reduced) is approximately £18. The total amount of connections of the Newcastle Power Company at the present time is 21,000 kilowatts, the maximum demand of the Power Company's system is 9,000 kilowatts, and the maximum plant installed at Carville 12,000 kilowatts. Assuming for the moment that every manufacturer supplied by the Power Company were to put in generating plant on his own account, at least 30,000 kilowatts of plant must be installed in order to meet this same demand. It is clear, then, that to do the same amount of work and taking 30,000 kilowatts of plant at Mr. Snell's lowest figure of £30 per kilowatt, the difference in capital cost in favour of the Power Company is £650,000. In other words, the diversity factor of a power company's system, where 21,000 kilowatts of electrical plant are connected to the mains, has a capitalized value of £650,000.

Although electric power has developed rapidly in Sunderland and on Tyneside during recent years in America and

Tyneside has always been a pioneer in matters of this kind. In the days of George Stephenson and James Watt, Tyneside was first in the utilization of steam power. At the present time Northumberland and Durham are again pioneers in electrical working; and provided that, as seems probable, the electric power companies in England are handled in the same enterprising manner as has been done in the United States and in Newcastle, we anticipate that the benefits that would accrue from the concentration of power are of enormous importance to the industries of this country.

No manufacturer, however large or however small, can afford at the present day to neglect the opportunity of purchasing cheap power.

The following communication has been received by the Secretary:—

4, Queen Street Place, London, E.C.,
February 23rd, 1905.

Dear Mr. Duckitt,

I am obliged for your having sent on to me a proof of Mr. Snell's paper on the "Application of Electricity to Industrial Purposes." I have read the paper with very much interest, and find myself in general agreement with the author's arguments.

One of the chief advantages of public power supply is that it enables a manufacturer to use power for driving his machinery without the necessity of having a generating plant on the premises. Given, then, a cheap enough power supply the smallest manufacturer is placed, in this matter, on an equality with the largest, and removes the disadvantage under which small manufacturers suffered on the introduction of steam power.

The question of the cost of generation then comes in, and it has to be considered whether or not the advantages of not having a generating plant on the premises counterbalance any small advantage there might be in the cost of generation as compared with the cost of public supply. In the typical cases the author has considered, the works are large enough to require a complete generating station or power house, with the necessary power house engineers. In such a case as this my experience confirms the author's views that, when electricity can be purchased for 1d. per unit or under, there is very little advantage, if any, to be

gained by manufacturing on site by steam power or ordinary gas engines. There are, however, cases where a comparatively small amount of power is required, and where the nature of the work is such that engineers and machine men are necessary in any case in which the costs of generation may be considerably lower than 1d. Consider, for example, the case of a small shipyard or similar works in which there are a number of scattered engines; engineers are required to attend to these. If such engines are to be replaced by motors and a generating plant put down, probably no additional labour at all would be required, as the motors would require less attention than the engines they have replaced, and the cost of labour so saved would more than cover the cost of attention to the generating plant.

And then the question of lighting needs to be considered in conjunction with electrical power. In power plants which have been put up to my designs, and in which the total cost of generation comes out to approximately 1d., I find that by electrically lighting the works throughout, the saving on the gas bill alone has been sufficient to entirely cover the costs of interest and depreciation on the generating plant.

It should be remembered that although electricity for power purposes can be purchased for 1d. per unit, there are very few cases where electricity for lighting purposes can be purchased for less than three times this amount.

The author does not compare local generation by a suction gas plant with a public supply. The local plant would compare more favourably in this case.

ıfluenced as regards speed by pressure variation, but this only pplies in cases where the polyphase motor is not fully loaded. 'he torque of a three-phase motor is proportional, not to he pressure, but to the square of the pressure, so that any fall ı pressure entails a very considerable increase in current in rder to maintain the same torque.

Apart from this question and the question of speed control, ıe polyphase motor possesses very marked advantages over the ɔntinuous current one. For shipyards and similar places, 'here a comparatively rough class of labour is employed, and here speed variation is not an important consideration, I cerıinly strongly advocate the polyphase motor. The elimination f commutators and brushes on sizes up to, say, 10 to 15 horseower, together with the elimination of starting resistances, ɜmove the weakest points of the electrical system. In the work 'hich I have had occasion to design, I find that up to 10 horseower three-phase motors can be switched right on to the mains 'ithout any resistance whatever. Fifteen horsepower motors 'an also be switched on, if starting on, say, half-load, by a hange-over switch which has the effect of putting the stator 'indings first in "star" and then in "delta," which is a kind series-parallel control arrangement. Although motors ı tched on the mains direct in this way take a starting current al to perhaps three or four times full load current, the motor ks up its speed so quickly that, as a rule, the generator does feel it. It is an advantage of the three-phase system that re is a kind of elastic flywheel effect which enables the tors to assist each other on varying loads, so that the variaıs on the branch cables to the motors are not altogether own on the main cables and generators.

Touching on the question of motor driving generally, it not be too strongly urged that the sole advantages are not fined to questions of cost of power. Cost of power is not a y big percentage of the total costs in many works, and even alf the coal bill could be saved it would not always be suffiıt inducement for a manufacturer to electrify his works. question of increased output is often a very much more portant consideration. To give an instance. A few weeks ago, connection with some of the work I have in hand, one or two tors were put down experimentally in a printing works, driv-

ing individual printing machines. The motors were set to drive the machines at precisely the same speed as they were driven before, this, in fact, being the maximum speed at which the printing machines could run. The immediate, and somewhat surprising result was, that in the first night's run, and it has been continued ever since, the printing machines each turned out 10 per cent. more impressions than they had previously done when driven from line shafts from gas engines. This result, then, is not a question of speed control but purely one of steady driving.

In other cases under my observation the output of a complete works has been increased by 25 per cent. owing to the steady speed and simple and efficient speed control which is possible by electric motor driving. As these increases in output are got without a corresponding increase in the wages or standing charges, the saving far outweighs any economy in power.

I am tempted to go on at much greater length on the advantages of motor driving, but fear that my comments have already exceeded the ordinary time limit.

Yours faithfully,

FRANK BROADBENT.

The discussion was adjourned.

[redacted]

RESUMED DISCUSSION ON MR. DICKIE'S PAPER ON THE "LAUNCH OF THE U.S.A. CRUISER, 'SOUTH DAKOTA.'"

Mr. Thomas Shaw said—Mr. Dickie deserves our thanks for his able paper on a very interesting subject, and we can perhaps show our appreciation best by criticising the departures made by him from the practice generally obtaining in this country.

The conditions under which a launch takes place in San Francisco are similar to our own, except that the rise and fall of tide is 5 feet, whilst in the United Kingdom the range is from 15 to 40 feet.

I will now attempt to briefly summarise the differences between Mr. Dickie's system and that usually employed in our own country. The standing ways are carried on cross supports varying from 3 to 6 feet apart, and where the height from ground to ways is above 5 feet, are specially constructed trestles. The standing ways consist of two baulks, each 18 inches wide, with a space of 11 inches between; the sliding baulks are of the same widths, the guide piece or ribband being fitted on the inner timber; the dog-shores are of modified form in consequence of the space between the ways, and the space is also utilised for the mechanical arrangement of releasing the shore, practically no shoring being used internally.

I certainly was very much surprised to note the small quantity of timber used in building the foundations for standing ways. Our custom is to build solid from the ground to ways, with the exception of holes, about 20 feet apart, for ingress and egress of workmen, and from the sliding ways to shell it is a solid bed. This method distributes the weight evenly over all the surface, whilst the former method, although helped by the fact of having a space of 11 inches transversely between the ways, still leaves a large unsupported surface in a fore and aft direction.

If we could rely upon the ways being perfectly true and remaining so when the vessel is being launched and no local strains being set up, it would be unnecessary to have a con-

tinuous bed, but as it is impossible to avoid local straining, the latter method will certainly distribute the strain and so minimise the probability of consequent damage.

The crucial point in all launches is the weight on fore poppets, which, of course, is at the maximum when the vessel first lifts aft, and to distribute this strain Mr. Dickie has introduced thirteen crushing pieces all 8 inches deep and graduated from 4 to 12 inches broad. The fact that seven of these were crushed from ½ to 7⅛ inches proves the efficacy of the arrangement in acting as a pad, and this innovation will no doubt be adopted by our home managers. The only objection I take to

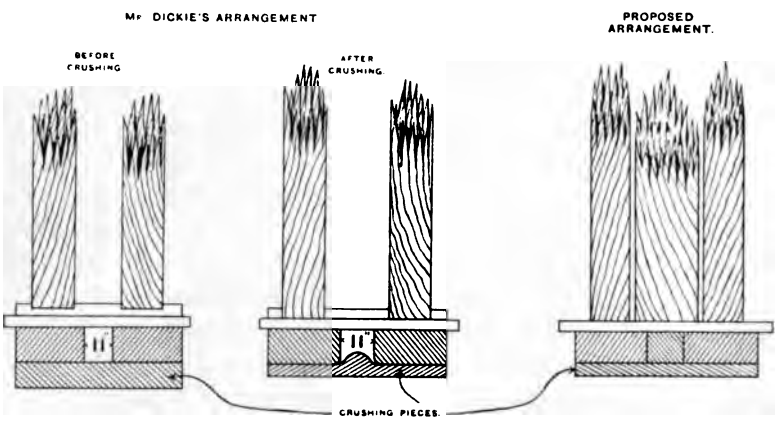

the arrangement is that the pressure was not divided over the whole transverse length of each crushing piece; the excessive

ng is one foot less than expected and the basis on which calcu-ations have been made; in consequence an ample margin gainst tipping must be allowed. *Vice versa*, if the height of vater is higher, and the time at which launch was fixed cannot e anticipated, an additional weight is thrown on fore poppets nd in one case within my knowledge had the effect of indenting he shell plating.

Time seems to be a very important factor with Mr. Dickie nd the performances given are very smart. Even allowing that pecial gantries had been erected (which is not stated), so that liding shores had only to be canted in, the short space of 42 inutes must surely stand as a record for this work. Again, the peration of ramming up was accomplished in 25 minutes, there ere 93 wedges each side, and four rams in all, which allows 32 econds to tighten up each wedge.

Whilst we in this country have probably erred on the safe ide in fitting internal stiffening, I think Mr. Dickie has gone the other extreme. Having in view the fact that all vessels ave to stand a greater strain about the fore poppets when unching than they will ever experience afterwards, I consider is incumbent to minimise this as far as possible by the intro-uction of internal strutting at this part, also at all abrupt rminations of strength and in way of bulkheads where buck-ng is likely to occur.

It is very difficult to compare costs unless all details are efore us, but the figures compare very favourably with the cost f launching similar vessels in this country.

The velocity curves are very complete, but one important oint is not mentioned, viz.: Was any allowance made for the lditional amount of displacement required to overcome the ertical component of the ship's momentum, and, if so, what was e amount allowed? If Mr. Dickie in his reply can give us is data it will certainly add to the usefulness of his paper.

The CHAIRMAN (Mr. R. H. Muir, Vice-President) said—I hink it my duty to move, as I now do, a very hearty vote of anks to Mr. Dickie for his paper. I read the paper and looked ito the figures given. It is very exhaustive and interesting to ny of us who have to do with the launching of vessels. I do ot mean to criticise the paper in any way. We all learn a good

deal more from our mishaps than we do from our successes, especially in launching. This certainly is a record, so far as I know, of work being done. Of course his launching cradle and everything is made up previously. The day of the launch (evidently to get over the temperatures to be dealt with), everything is removed and rebuilt and re-greased, and done in so many hours and minutes. We never try anything of that kind in this country. We run the risk, even in the coldest weather, of putting in all our make-up from four to ten days before the time. Therefore, we have to take our chance of frost in the tallow. The weight of the ship is not excessive, and the problem lies within the limits of what a good many of us know something about. I understand an interesting problem is being worked out just now at Elswick shipyard for their next launch. If I am correct, the launching weight is somewhere between 9,000 and 10,000 tons, the largest previous weight ever launched at Elswick being 8,000 tons. I was surprised on reading the report of the launch of the "Carmania" at Clydebank, a few days ago, to find the launching weight given as 13,000 tons. That is an enormous advance on any figure in this country, so far as I am aware. I propose a vote of thanks to Mr. Dickie for his paper.

The proposal was carried with acclamation.

DISCUSSION ON MR. FRANK LITTLE'S PAPER ON

MR. JAMES DICKIE'S REPLY TO THE DISCUSSION ON HIS PAPER ON "LAUNCH OF THE U.S.A. CRUISER 'SOUTH DAKOTA,' AT THE UNION IRON WORKS, SAN FRANCISCO."

SAN FRANCISCO, CALIFORNIA,
March, 1905.

DEAR MR. DUCKITT,

I have pleasure in sending you my reply to the discussion on my paper.

Ground and Sliding Ways.—Mr. Twaddell says that he does not see the reason for making the ground and sliding ways with 11 inches between them. There are several reasons for this: first, ways 18 inches wide are a very good size for launching ordinary vessels; secondly, they are handy and easily stored when not in use. We have ways 8 inches wide which are used for very small vessels, such as torpedo boat destroyers, etc., ways 14 inches wide which take small merchant vessels, ways 18 inches wide for medium sized vessels, ways 20 inches wide for larger vessels, and then for still larger ones we use them combined to get the surface required. By placing them apart, there is no need of having the upper surfaces exactly even with each other as they must be if laid close, and if laid close they require to be cross bolted to keep them fair on top. Laying them apart also gives a wider bearing on the vessel, which is a good thing under the bottom, where the heavy weight comes at the end of the ways and at the fore poppets, and it also affords a simple method of securing the dog-shore.

The Dog-shore.—If the dog-shore were on the outside in the ordinary manner, the sliding ways would have to be bolted together and trued up on the face side, whereas, when the dog-shore is between them, both pieces are held and all the bolting in the abutment pieces is in double shear, consequently half the amount suffices. Mr. Twaddell seems to be afraid of not getting the dog-shore out when it is placed where he cannot get at it with an axe. We have a block on top of the after end of the dog-shore and a wedge between it and the vessel's bottom,

so that if it got stuck, it could easily be knocked out with a few blows of a ram. We have always provided this but never had occasion to use it. With an angle of 1 in 5 on the after end of the shore, it flies out instantly when the trip shore is removed; a ram is also provided for the trip shore should it stick; we had to use this once a few years ago, the striking weight being too light. If he could see how nicely the dog-shore does come out, his fears would disappear.

Trestles.—Mr. Twaddell does not seem to think much of our system of trestles under the keel and launch ways where they are more than six feet high. This method has been adopted for several good reasons: firstly, for keel blocks; they stand while the vessel is building without altering their height, whereas timber built up as cribbing shrinks (Oregon pine as much as a quarter of an inch to the foot and very irregularly), while the trestle, being end grain, stays practically where it was put when the keel was laid. We use the same for our high bilge blocks, only they are turned fore and aft. Secondly, they have the advantage of admitting light under the ways, and the person on the outside in charge can see every keel block and what the men are doing: the cradle being all open in the same manner where the ways are near the ground at the after end, he can look between the packing and see every man at work. Thirdly, the trestles can be made and set up with much less cost than cribbing and are easily stowed away when not in use. Fourthly, they are absolutely steady transversely.

Poppets.—Mr. Twaddell is somewhat shaky in regard to our

Inside Shoring.—I would like to ask what good inside shoring would do and where he would put it? I can see that a poppet that bore on the plating between the frames ought to have some shores inside. I do not think that anyone looking at the drawings would ask for inside shoring, especially when he sees the method taken with the crushing pieces to distribute the strain fore and aft. With rigid poppets, the weight must all come on one point and something must be done inside to save the plating between the frames and even the frames themselves from being crushed. We feel so confident that we pay little attention to the weight on the fore poppets except to get the crushing pieces the proper size. Looking at the drawings of the launch ways of vessels where the poppets are solid timber on end the full width of the ways, I have often wondered if they had ever stopped to figure the weight per square foot in relation to the crushing strength of the timber. Our poppets are certainly large enough, else they would show signs of being overloaded. They are not only held by clips under the plate edges but have a substantial plate strap under the keel, with its ends let into the saddle timbers and well bolted. We have been using this style of poppet since 1881 and have never had them fail, and we have been using the crushing pieces since 1893, when we launched the first battleship for the U.S. Government, and so far as I know that was the first time they were ever used.

Launching Over Mud.—Up to the time of launching this battleship, we had never launched a vessel with piling out to the lower end of the ways; we planked the mud solid on top with planks, 6 inches thick, laid crosswise. The width of this platform was just double the distance of the ways between centres, so that when it sank with the weight of the ship it went down evenly. If the planks were too short the ends would go down and the centre bulge up, or if too long the centre would go down and the ends come up, and distort the ways; but with the platform the correct width these difficulties are overcome and it forms a fine soft cushion both under the bottom where the pressure is greatest and at the fore end when the vessel lifts aft, spreading the weight on the fore poppets. We launched vessels up to 4,150 tons launching weight with a pressure of 3 tons per square foot over soft mud in this manner very successfully, but our newer building slips will not admit of so doing on account

of the mud being too high; we then dredged it out and resorted to piling.

Side Shores.—Mr. Twaddell also has a kindly feeling for the side shores on ways and is unwilling to dispense with them. Years ago, when we were building wooden vessels, a neighbour of ours asked me one day why we never had a vessel fall down between the ways in launching; he said, "I put side shores on my ways until you can't rest and still every second or third ship falls through." I said, "Plank the mud crosswise" (he planked it fore and aft), "lay your ways level" (he canted them $\frac{3}{8}$ inch to the foot), "leave out all side shores and tie your ways together and your troubles will end." On solid ground the side shores are useless but do no harm, but on soft ground they are dangerous and the reason is very evident: at the upper end, where the ship is resting on the ways, they do no harm and certainly no good, for with the weight of the ship on the ways it would take an enormous power to move them, but at the lower end where the water comes, the outer end of the side shore is spiked to the temporary pile put in for a backing for it and the other end is spiked to the ways. The outer end is generally much lower than the end on the ways, and when the ways rise ahead of the ship as they always do (I have, by actual measurement, found them to rise over 18 inches), the side shores pull the ways out, and when the weight comes on the abutments give way rather than push them back again. Especially is this true when the ways are canted in, however slightly, and the evil increases as the vessel goes on, until she drops through.

uld examine every carpenter that went near a set of ways that he did not have an adze in his tool box. Five dollars' of shingles will pack up an entire vessel and all the blocks the ways can be used again indefinitely. I do not think ıch of the value of the timber destroyed as to see men ; to build up any cribbing or blocking with blocks that been spoiled by trying to fit them under launch ways; they ot lie still and the fellow with the adze is at them again, erlasting bill of expense. All of our blocking is made of timber, square, and varying 2 inches in size, such as 8 ı by 14 inches, 10 inches by 14 inches, 12 inches by 14 ı and 14 inches by 14 inches; no odd inches.

acing Sliding Ways.—Another point Mr. Twaddell touches putting the sliding ways in place on the day of the launch. was not done to make a record. On the day that the th Dakota" was launched I noticed that the temperature 2 degrees in the shade at mid-day and of course much in the sun. It was so hot that the grease ran off the where the sun reached it, but by the time of the launch, mperature had fallen to 60 degrees. So we greased the end of the ways up just ahead of the rising tide and kept covered from the sun as much as possible. Under the n it was not hot enough to melt the grease off, but we t like to have the grease with soap on top of it stand long such conditions. Generally, California climate is favour- for launching, as in the winter time all the high tides from 9 to 12 o'clock during the day, and in the summer from 6 to 11 o'clock in the evening, so that there is not variation in the temperature at launching time. In the ıt case the sliding ways had been in before and all the ng fitted, but sometimes we use a false piece the same ıess as the sliding ways and fit the packing and only cant sliding ways after they are greased. However, there is ly any difference in the cost, as our sliding ways are handled, as you will notice the short time it takes with rdinary launching gang to put them in place, *i.e.*, 42 es. We never touch a shore or keel block until the vessel ımed up, but in this case we were testing inside compart- ı and had a few extra blocks under the bottom, which taken out before ramming up, as they were close to the and in the way.

The Cost.—Mr. Twaddell asks one question about the cost. As I said in my paper, the labour cost includes everything from the time the first man touched the ways to bring them to the ship from where they were lying, and in this case includes the driving and capping of 80 piles at the lower end, which were put in specially for this vessel, those built previously in this slip having been launched over a platform on the mud.

The Mud Bank.—Mr. Twaddell also notices our mud. San Francisco Bay is famed for its mud and at the Union Iron Works we have our share; it is so soft that you cannot tell where the mud ends and water begins. In sounding we use a pole with a flat board on the end, so as to be able to get the depth of water. We can haul a vessel at the wharves that is drawing 3 feet more water than soundings will show. If he will examine the chronograph record he will be unable to detect any sudden slowing up as she entered the mud. The mud was about level on top, so that she ploughed into the bank about 8½ feet for the entire 150 feet of travel.

Weight on Fore Poppets.—One other point raised is the weight on the fore poppets, the "South Dakota's" weight being 1,635 tons, while the "Russell" had only 1,100 tons. As I said before, we do not try to reduce the weight on the fore poppets but simply run the ways out far enough to get sufficient water on the end to be sure not to crush the bottom of the vessel, and for this reason we curve the ways. To have launched the "South Dakota" on straight ways at an angle of 1 in 24, or ½ inch to the foot, would have required ways 103 feet longer than they were,

water from false work, which costs considerable money. For this reason we make our ways as short as possible, although it does increase the weight on the fore poppets, but we claim that with the crushing pieces we have less strain on the ship than if the weight was less and the poppets solid.

Another reason for making the ways as short as possible is the distance from the end of the ways at present to the pier at the opposite side of the basin. This is only 950 feet and would not leave much room for stopping the ship if the ways were extended 100 feet. We would then have only 850 feet, or 350 feet more than the length of the ship, and we expect to build them longer than 500 feet.

I trust that these remarks will answer fully all the points raised by Mr. Twaddell, and if other members bring up more, I will gladly answer them.

Most of Mr. Shaw's remarks are covered by my reply to Mr. Twaddell's remarks. I will only reply to those not already covered.

Blocking Under Ways.—Mr. Shaw notes the small amount of blocking under the ground ways. I have noted very carefully the effect of the blocks spaced so wide as to have the ground ways bend slightly between them, but the only thing I could notice was that the grease would be slightly thinner over the blocks than between them. This I noticed in torpedo boat destroyers, where the ground ways were 6 inches thick by 8 inches wide and the blocks 6 feet centres, with a load of about one to half a ton per square foot; the sliding ways 4 inches thick and packing wedges 4 feet centres; angle of ways, 1 in 20. These vessels would start promptly and run nicely, which I attributed to the ways bending enough to reduce the surface to nearly 3 tons per foot; in the larger vessels I could notice no particular stress anywhere and consequently know that the wide spacing is perfectly safe, and it affords daylight to the men inside.

The Cradle.—I have always used the packing wedges on the frames, only because I see no use of trying to take any weight on plating ½ inch to ⅝ inch thick, with frames spaced 4 feet centres; it simply will not take any weight and will just bend up: the frame has got to take it and the timber and labour might be saved. Seeing the warships act so nicely with packing

wedges 4 feet apart, I have used wedges on alternate frames on merchant vessels even with frames spaced 27 inches.

The Crushing Pieces.—Mr. Shaw seems to like the crushing pieces under the forward poppets and suggests an improvement.* He seems to be afraid that they will break and cause the ways to spread apart at the fore end. As I said in my paper, we put a tie rod between the two sides but do not attach much importance to it, never having noticed any spreading tendency. If the poppets hold up to their work they require little or nothing, and if they were to give way, nothing in the line of tie rods would do any good. If Mr. Shaw had completed his sketch, he would have seen that he gains nothing by having an extra poppet timber between the ones shown in my paper, as it rests on

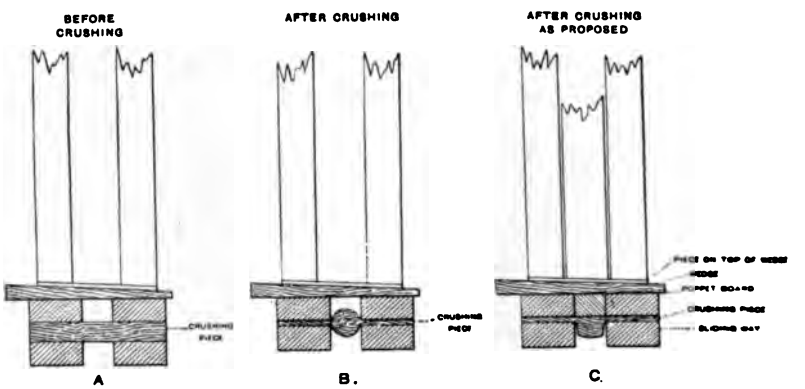

nothing; instead of the crushing pieces taking the form shown

Side Shores.—I have discussed the question of side shores in my reply to Mr. Twaddell's remarks.

Weight on Fore Poppets.—As I said in my paper, I do not dread a little extra weight on the fore poppets, consequently, curve the ways and do not try to reduce it. Right at this point is where the cost of launching can be reduced. Firstly, by having a large inclination to the ways and laying them straight: this necessitates keeping the vessel high at the fore end which costs for staging and blocking. Secondly, by curving the ways, which has the advantage of keeping the vessel comparatively low at the fore end and reducing the strain on the dog-shore while holding before the launch. I have given, in my reply to Mr. Twaddell's remarks, the weight on the fore poppets at $\frac{1}{2}$ inch declivity per foot, and also at $\frac{5}{8}$ inch per foot; this was taken with the keel in the same relation to the ways as the vessel was launched on, which was almost parallel. There is only one way to reduce the weight on the fore poppets, and that is to have the vessel built at the trim at which she floats when launched. I have read carefully Mr. Shaw's remarks about the height of the tide altering the weight on the fore poppets. So far as I can see, if the tide came up and floated the vessel in the yard, the weight on the fore poppets would be the same as if she was launched on straight ways. If the ways were convex the weight on the fore poppets would be increased, and if concave, it would be decreased. I launched one small vessel which was exactly the trim on which she was built, consequently there was no increase in the weight on the fore poppets as she went down the ways.

Extra Displacement due to Momentum.—This was not taken into account in the calculations. While it would increase the draft slightly before lifting, it would make very little difference to either the weight on the end of the ways or on the fore poppets.

Time.—In reply to Mr. Muir's remarks about making a record of handling the ways quickly, I would say that no attempt was made in that direction. The cradle being light, it is easily handled, and we like to launch as soon as possible after the grease is on the ways on account of climatic conditions.

Yours faithfully,

JAMES DICKIE.

NORTH-EAST COAST INSTITUTION OF ENGINEERS AND SHIPBUILDERS.

TWENTY-FIRST SESSION, 1904-1905.

PROCEEDINGS.

SPECIAL (SIXTH GENERAL) MEETING OF THE SESSION, HELD IN THE LECTURE THEATRE OF THE LITERARY AND PHILOSOPHICAL SOCIETY, WESTGATE ROAD, NEWCASTLE-UPON-TYNE, ON FRIDAY EVENING, MARCH 3RD, 1905.

JOHN TWEEDY, ESQ., J.P., PAST-PRESIDENT, IN THE CHAIR.

The SECRETARY read the notice convening the meeting, which stated that the business was—"To consider the present Board of Trade Regulations for Certificated Marine Engineers, and to suggest certain modifications."

It should be particularly noted that the subject for discussion is "apprentices who are to become certificated marine engineers," including the length of apprenticeship and the manner in which the term of apprenticeship should be employed, and it is not intended that any reference should be made to the career subsequent to the completion of the period of apprenticeship.

Those responsible for the Board of Trade regulations appear to have failed to differentiate between a skilled mechanic and a marine engineer. All marine engineers should be capable mechanics but all mechanics are not marine engineers. The question is, Can a youth become a capable mechanic and receive the basis training necessary for a marine engineer during a period of four years? The reply by all competent authorities would be in the negative. The recognised term of apprenticeship for each of the trades connected with engineering is five years, and by advocating, or at least accepting, a term of four years, the Board of Trade not only lowers the accepted standard but by inference assumes that a marine engineer requires less training than a journeyman of any one particular trade.

The regulation determining how an apprenticeship shall be employed is also difficult to understand, as it provides that the more experienced the apprentice the less eligible is he to become a marine engineer. We have an apt illustration of the folly of this regulation at the works with which I am associated at Hartlepool, where, by a scheme for the advancement of apprentices, the boys who display the greatest diligence and aptitude are entitled at the end of each year to serve in any

the apprentice time must have been passed in the fitting or erecting shops or in both.

"In calculating the four years of artisan service, which are to constitute the required apprenticeship, which should not begin at an earlier date than 15, time spent at a technical school (recognised by the Board of Trade as suitable) where there is an engineering laboratory, may be taken into account, and accepted as equivalent to artisan service, at the ratio of three years in a technical school to two in artisan service, provided that the applicant was over 15 years of age and can produce the principal's certificate for regular attendance and satisfactory progress, and provided also that in such case the other portion of the time was spent in the fitting or erecting shops of an engineer as indicated above."

In view of the practical experience and general engineering wledge now required by engineers for the efficient perform- of their duties at sea, it is desirable that the term of enticeship should be raised from a minimum of four years minimum of five years.

he regulation which requires an apprentice to have served -fourths of his apprenticeship in the fitting and erecting am engines, thus allowing only one-fourth for the turning machine departments as well as other important branches technical and practical, is equivalent to penalising an ntice who may have opportunities for obtaining more varied eering experience, and therefore lowers the possible lard of marine engineers.

f an apprenticeship of five years, three years may be yed in any department or departments for the manufacture eam engines and boilers, or any of the auxiliary steam es used on ship board, and of these three years one year be employed in the drawing office, and one year at the day es of an approved technical college, and the remaining two s should be employed in the fitting and erecting of marine n engines, either in process of manufacture, or during fit- on board ship, or in repairing when in the dockyard.

précis of the discussion to-night will be considered by the ncil of this Institution and after approval will be forwarded e Consultative Committee, who will adopt a report to be sub- ed to the President of the Board of Trade by deputation.

employers must be kept very clearly before us, so that, whatever decision may be arrived at, they will not be unduly penalised. In the third place, we have to deal with the Board of Trade, and the proposed alterations, in my opinion, should be of such a nature and so reasonable that the Board of Trade will be able to accept of them. In the long run the alteration of these rules depends upon the Board of Trade; and the Committee who have to appear before the Board of Trade should appear before them with such a strong case that it will carry the day, and enable them, without any trouble, to alter their present rules. Without going any further, I think that is the line on which our discussion should proceed, and I feel quite sure that the ability of the gentlemen here present will, in the various methods that suggest themselves to them, enable them to deal with the different manners in which each would consider that this may best be elaborated.

The Chairman—We shall be glad to hear the views of consulting engineers and others who have experience of this question.

Mr. A. Harrison (of Sunderland) said—The quality and efficiency of sea-going engineers is one that affects most vitally the greater portion of the members of this Institution. It is quite as much to the interest of the engine-builder to secure the best men to take charge of machinery during guarantee period so that the best results possible may be obtained, as it is [illegible] and his superintendent, who, in a very great [illegible] the engineer afterwards for the [illegible] which forms such a [illegible]

steam steering gears, electric lighting plant, refrigerating machinery, chemical fire-extinguishing plant, etc., all call for an amount of skill on the part of the engineer unknown a few years ago, and the way in which these useful accessories are handled compel me to believe that the sea-going men of to-day are certainly not inferior as engineers, in the broadest sense of the term, to those of a quarter of a century ago.

Notwithstanding all this, after thoughtful consideration one is compelled to admit that there is something lacking in the sea-going engineer of to-day, and my own feeling is that he is seriously short of practical training as compared with the men of 25 years ago. At that time it was the custom for boys to start work at 14 years of age and continue their apprenticeship till they were 21 years old, and, in this way, the ordinary mechanic had practically seven years' shop training during apprenticeship; and this is not all, for at that time we not only worked longer hours for an ordinary week's work, without overtime, but, as the Factory Act did not limit our overtime, it was the regular practice for boys to work every night during busy times. This overtime, during apprenticeship, added considerably to the boys' practical experience, and it is not too much to say that apprentices had an average of six years' practical working in the factory.

For over 20 years the Board of Trade have been recommended to make the minimum apprenticeship for their certificated engineers five years, and this was with a view of allowing not less than four years for actual workshop time; and it is surprising to me to find this Council, at this time of day, suggesting by their circular, a minimum service in the workshop of only three years. If three years' workshop service is still to be considered sufficient to enable a man to secure a Board of Trade certificate, it matters little whether one of these three years is spent in an auxiliary department, or, as at present specified, in fitting or erecting shop, or both, as the actual result will still prove unsatisfactory.

It should be borne in mind that, whilst the Board of Trade must have a fixed minimum time for shop service, it is only fixed for those who, through exceptional circumstances, are unable to obtain more. It is most difficult to prevent it being assumed that as the Board of Trade accept it, no more shop time

is necessary to make a really good sea-going engineer—an assumption which is entirely wrong.

Length of shop service should be carefully noted by superintendents before appointing engineers.

There is no difficulty whatever in getting apprentices to put in at least four years' workshop time, and whether my own apprentices go through the full three years' college course or serve as ordinary engineers, they all serve a minimum time in the shop of four years; and, put through a proper course of training, they have shown most excellent results. I submit this is the minimum time that should be accepted by the Board of Trade.

We must not forget that in this discussion we are dealing with sea-going engineers only, and it is not a question as to the best course of training for an engineer in the broad sense of the term.

The very first essential for a sea-going engineer is that he be a thoroughly good all round mechanic, with enough skill to do any ordinary practical work about his machinery, either in the way of repairs or overhauling, and it is quite impossible to turn out such a man with only three years' shop training. I sincerely trust this Institution will go solidly for a minimum workshop training of four years and a five years' apprenticeship being required by the Board of Trade.

The theoretical training required by the Board of Trade could be satisfactorily acquired at nights after working hours, and during the twelve months of his apprenticeship not specially required

I myself would not take apprentices for four years' service in shops and one at college, as I already have an arrangement whereby the five-year boys spend all their time in the shops, except when they get a term in our drawing office, and our three-year college boys serve six years.

It is quite impossible to do more than merely suggest what a boy should do during apprenticeship, as shop arrangements vary so considerably, but, assuming that a boy has only four years for workshop time, his first six months could be spent in stores, time office, plumbers' shop, striking for tool-fettler, or other preliminary work; his next eighteen months should be on machines, which are equally as important as fitting or erecting, and his last two years should be either fitting or erecting, or better still, both. By fitting, I mean all kinds of bench work, such as valve gear, eccentrics, valves, auxiliary plant, and all manner of hammer, chisel and file work, including repairs on ships; whilst erecting must also include fitting up ships, etc.

The Board of Trade should compel this two years' service at fitting or erecting, and one year on machines. It does not appear to me desirable or necessary for a boy to go through either the pattern shop, boiler shop, coppersmiths' shop or foundries, as these are so special in themselves that they require more time to get over the preliminaries than the boy can afford.

Whether the Board of Trade get good material after four years' shop training depends very largely on whether the apprentices have been put through a thorough systematic course, and this can only be secured by the hearty co-operation of the employer and his shop foreman. At my own particular works we have, for many years, made it a rule that boys do not stop more than three months on any machine or particular kind of work, and it is not only desirable to move the boys frequently, but it is important in moving them to see that they are not moved from a small machine to one of the same design a little larger, but to one of quite a different type. In this way boys are encouraged and get over a tremendous lot of ground with much advantage to their employers and themselves.

With a minimum apprenticeship of five years, four of which shall be spent in the workshop, three of which shall be devoted to machines, fitting and erecting, and with the systematic training indicated, much of the present difficulty with regard to sea-going engineers will be removed.

is necessary to make a really good sea-going engineer—assumption which is entirely wrong.

Length of shop service should be carefully noted by sup intendents before appointing engineers.

There is no difficulty whatever in getting apprentices to in at least four years' workshop time, and whether my apprentices go through the full three years' college course serve as ordinary engineers, they all serve a minimum time the shop of four years; and, put through a proper course training, they have shown most excellent results. I submit is the minimum time that should be accepted by the Board Trade.

We must not forget that in this discussion we are deal with sea-going engineers only, and it is not a question as to best course of training for an engineer in the broad sense the term.

The very first essential for a sea-going engineer is that he a thoroughly good all round mechanic, with enough skill to any ordinary practical work about his machinery, either in way of repairs or overhauling, and it is quite impossible to out such a man with only three years' shop training. I sincerely trust this Institution will go solidly for a minimum workshop training of four years and a five years' apprenticeship required by the Board of Trade.

The theoretical training required by the Board of Trade be satisfactorily acquired at nights after working hours, and ing the twelve months of his apprenticeship not specially

[illegible] with breakdowns, we [illegible] an think and get over [illegible] to deal with problems [illegible] hat the difficulties and [illegible] almost always occur [illegible] have a spell of bad [illegible] as they often are in [illegible] ouble, that is the time [illegible] hen the chief engineer [illegible] heir knowledge at their [illegible] ten think that some of [illegible] ever heard of any more, [illegible] achinery in bad weather [illegible] after days and weeks [illegible] vercome difficulties, and [illegible] ghly trained men in the [illegible] managed, a young man [illegible] nce. I quite agree apprenfitting [illegible] possible, to day technical [illegible] and proper training is the [illegible] office, where problems are [illegible] ions of business. I am often [illegible] would be if you took the [illegible] class and see what they are [illegible] they are making copies from, [illegible] lying on the blackboard. You [illegible] of date and antiquated. It is [illegible] ppreciate that they really mean [illegible] the drawing office, where in everyproblems of economy, not only of [illegible] of money, then they realize they [illegible] worth doing, and they are much [illegible] With regard to Mr. Harrison's [illegible] for lack of drawing office experi-[illegible], probably many of you will agree [illegible] of night classes after a day's work [illegible] tory business. If a growing boy [illegible] k in the morning, has a snack of [illegible] before he is fully awake, and puts [illegible] he day, I do not think such a boy

I earnestly trust this Institution will recommend the Board of Trade to adopt, as a minimum, the length of service here suggested.

The CHAIRMAN—It is important for the Board of Trade Committee to ascertain, as clearly as possible, the general average view as to the length of service, whether four or five years, and some indications, too, of your views on the last paragraph, that is, the nature of the work done by the apprentice while he is an apprentice. We have had Mr. Harrison's view, and we would esteem very much the favour of the views of many of you here.

Mr. T. WESTGARTH (Vice-President) said—I agree completely with the views expressed by Mr. Morison. I think the present arrangements for the training of young marine engineers are not quite satisfactory. I certainly agree that the time of apprenticeship should be longer—that it should be a minimum of five years—but I do not quite agree with my friend Mr. Harrison in the way the time should be spent. As I understand it, Mr. Harrison seems to think that a very large proportion of the training of an apprentice, who is going to be a marine engineer, should be spent in practical work, even to the exclusion of theoretical work. I look upon it rather the other way round. I think a man, if he is to be a good engineer, certainly if he is to be a reliable chief engineer, should have very considerable technical and theoretical training. Because, after all, it is only in cases

we must have skilled mechanics to deal with breakdowns, we also want highly trained engineers who can think and get over difficulties that occur and who know how to deal with problems which arise. And you must remember that the difficulties and problems to be considered and dealt with almost always occur under adverse circumstances. If you have a spell of bad weather, and everybody is bad tempered, as they often are in bad weather, and everything is giving trouble, that is the time an accident will occur, and you want then the chief engineer and his assistants to be cool and have their knowledge at their finger ends and know what to do. I often think that some of those ships that are reported lost, and never heard of any more, are so lost owing to breakdowns in the machinery in bad weather —perhaps, we cannot tell, but it may be—after days and weeks of struggling in the engine-room to overcome difficulties, and it is at those times that we want highly trained men in the engine-room. I think, if it could be managed, a young man ought to have a spell in the drawing office. I quite agree apprentices should go to night schools and, if possible, to day technical schools, but, after all, the best and proper training is the practical training in the drawing office, where problems are being considered in the actual relations of business. I am often disappointed, and I dare say you would be if you took the trouble to go into many a science class and see what they are teaching the boys, and see what they are making copies from, and the illustrations they are studying on the blackboard. You would sometimes find they are out of date and antiquated. It is difficult to make a young man appreciate that they really mean business; whereas, if they are in the drawing office, where in everyday work they are considering problems of economy, not only of steam, but of production and of money, then they realize they are doing something that is worth doing, and they are much more likely to be impressed. With regard to Mr. Harrison's idea that a boy might make up for lack of drawing office experience by attending night classes, probably many of you will agree with me that the attending of night classes after a day's work is a very weary and unsatisfactory business. If a growing boy gets up to work at six o'clock in the morning, has a snack of breakfast, and gets to work before he is fully awake, and puts in a good spell to the end of the day, I do not think such a boy

should be pressed to go to too many evening classes. We have a rule in our works insisting on a boy attending at least one night class in the week. I am often consulted on this matter. Parents, especially, who are anxious come and say, "Well, I will make him attend a night class every night in the week." I reply, "Nothing of the kind." If a boy attends one or two night classes in the week and does a little preparation at home it is quite as much as any boy can be expected to do. Therefore, while night classes are doing a useful work they cannot take the place of the drawing office. We cannot make it compulsory for a boy to go into the drawing office, because there is only room for the best of them; but still I wish to emphasize that, in my opinion, that should be a most important part of the training of a young engineer.

There is, to my mind, a little omission in the proposals of the Committee, really excellent as I think they are. I think that a certain amount of time in the boiler shop should count. Of course it is not many boys who go in for the boiler shop—more's the pity, I think—but I think a boy who is really being trained for an engineer would be much better off if he had a spell in the boiler shop. When I used to wish for accidents to happen at sea, I never wished them to occur to the boilers, because I never knew anything about boiler work, and I would have been utterly at a loss, and I used to wonder what would happen if I were sent to the back end to put in a tube in a sea-way, and what I should do. Fortunately, I had never to be tried. To my mind the care of boilers in a steam-ship is a most important

my experience shows it is not fully appreciated by the average sea-going engineer. The only other remark I have to make is a suggestion that the Committee consider the advisability of making it compulsory that a certain amount of time should be spent fitting out engines on board. A man can come and ask for a certificate and say he is a skilled engineer if he has served his time in a place making land engines, or even looms, and such like things. Many a boy has had no experience at the fitting-out wharf, and if he is sent to sea and has to take charge of a watch, he must be altogether "at sea"; and it must generally be good luck more than good management that such fellows do not come to grief sometimes. I feel strongly that we ought to recommend that a certain time—at least six months—of the apprenticeship of a boy to qualify as a sea-going engineer ought to be spent at the fitting-out wharf.

Mr. JAMES STEWART said—I would be inclined to agree with Mr. Morison and with the last speaker, Mr. Westgarth, rather than with my friend Mr. Harrison, as to the division of the apprentice's time, and mainly for the reason that by that system the intelligence of the engineer is cultivated, and that is what is wanted in the sea-going engineer.

But the point I wish to speak about specially is the apprenticeship term, and I would strongly advocate making the five years' apprenticeship compulsory. I am really at a loss to understand why the Board of Trade has not adopted this minimum before now or why they did not do so when they made the recent change from the three- to the four-year period. One seldom, if ever, nowadays hears of a four-year apprentice, at least that is my experience, extending over a good many years now, in dealing with applications for engineers' berths; and if the four-year apprentice does not exist why should he be provided for? In the earlier days, when the old regulations were drawn out, three years was fixed upon as the minimum. But there was a good reason for it then in the limited supply of men available—a reason, however, which does not hold good now, for I am convinced that the supply of men would not be affected by extending the minimum term to five years.

I see no reason why this minimum should not be adopted, but there is every reason why it should, in the interest both of

the apprentice himself and of the shipowner whose property he is to take charge of in the future. The demands upon a man's knowledge and experience have increased so much in recent years, through the introduction of improved and auxiliary machinery in our steamers, that it is quite impossible for the apprentice to gain the required knowledge in less time than five years. And this leads me to point out what might be termed an inconsistency in the Board of Trade regulations, in that, while the list of "elementary questions" has been gradually extended to embrace such subjects as dynamos and oil motors, etc., the time to acquire adequate knowledge of these subjects has not been extended proportionately. Personally, I am hopeful that the Board of Trade will soon see their way to making the five years' apprenticeship compulsory. In recently extending the time to four years they recognized that a change was necessary, but, possibly, thought that, in order to avoid inflicting hardship on individuals, the change should be a gradual one.

The CHAIRMAN—Mr. Stewart is a man of great experience. I should be pleased if he would give us the benefit of his view more clearly, whether he attaches importance to time being spent by an apprentice in the drawing office, and whether he attaches importance to an apprentice likely to become a sea-going engineer, with all the complicated machinery of the present day, having six or twelve months' training in a day college or school.

not successful in getting any promise. The second time we went before Mr. Mundella and he promised that this question would be put right. But of course the government got into disaster and came out of office, and we didn't get the promise fulfilled. We went back when Mr. Ritchie was President of the Board of Trade, and we had the support of Sir Thomas Richardson, Sir William Allan, Sir Fortescue Flannery and all the leading engineers of the time, but we found Mr. Ritchie a very hard nut to crack upon this question. I believe he was fairly well convinced by the arguments that were put forward, but there was something behind the scenes which has been mentioned to-night, and that was the shipowners. Really, the shipowners have been at the bottom of the whole business in stopping this question from being brought to the proper standard. They were under the impression, whatever was said to the contrary, that this extending of the apprenticeship time to five years was going to make a shortage of engineers. Consequently it was going to make the engineer a more valuable man, and a more highly paid man; and as was said by one gentleman to-night we ought to consider the master in connection with the division of the time and the term of apprenticeship. The shipowners were in the same mind and thought they should have some consideration and they were prepared to have the inferior man rather than run the risk of the pocket being touched and having the skilled man. We went in May, 1900, and although they conceded to us one year more time it was not brought into force until the 1st January, 1904, so there was a space of four years allowed to get a few more short service engineers ready before it was brought into force. We have tried the Board of Trade since, but of course the answer we got was, that they have not had time to see what effect it was going to have on the training of engineers. I cannot agree with Mr. Stewart. I do think an engineer who has to go to sea in charge of machinery should be trained in a marine engineering works. I was at sea myself for 13 or 14 years and I had to take one or two young men who came from weaving mills or machine shops in the Midlands, but I knew they had to be trained on board the ship. They had to be made marine engineers. They could use the hammer and chisel, but absolutely did not know the names of the different parts of machinery on board ship, and it fell to senior engineers to have to train these

men and look after them—to make what one might call an embryo marine engineer, and they were not twelve months on board a ship before they were in a position to get second-class certificates and come and take charge of machinery. I do think a twelve months' training in the drawing office is an essential if one could see his way clear to get this. I was fortunate in that I got three and a half years in the drawing office. I had about seven years' apprenticeship, and I know it was the experience I got in the drawing office that was the means of helping me on. In the works of which I am manager now we try and give the apprentices a turn in all the different departments in the place so as to make them capable of taking charge on board ship. We also give them the chance of having a turn in the drawing office. We have not a large drawing office nor a large staff, but with what we have we give the apprentices that advantage. We have a competitive examination in the shop among the apprentices on the same lines as the Board of Trade examination—a test of figures and a test of making a drawing, and the one who comes out highest gets the position in the drawing office. There is another matter in connection with the conditions for a second-class certificate and that is away from the mechanic's questio altogether. If you read the instructions you will find it is quit possible for a man who has not served any time at all to get second-class certificate. The sea service of the shovel engineer not dead yet. There are still conditions in these qualificatio for a second engineer which allow a man who has had fo years in an engine room to become an engineer and I think th was one of the points we struck at. We wanted them out the conditions altogether so as to make it impossible for a ma

been fighting this question, and the last time we went up to London, with such a strong body of influential men to support us, we fully expected to carry our point. We did get one year added, and I hope when this influential deputation goes—and we are arranging to go again—we will be able to get the other year put on to the apprenticeship. As far as the division of the time is concerned I think our friends Mr. Westgarth and Mr. Morison mentioned fairly well the stages an apprentice should go through to make him a qualified man. He does also require some technical education.

The CHAIRMAN—We are much obliged to Mr. Spencer for his remarks about unqualified engineers. I wish to point out for the guidance of the meeting that we are only empowered to discuss the question of the training of apprentices before they become engineers, so we are precluded from discussing the other question.

Mr. JAMES SHAW said—I wish to add a word in regard to the last paragraph in the recommendation, which states that, "Of an apprenticeship of five years, three years may be employed in any department or departments, for the manufacture of steam engines and boilers or any of the auxiliary steam engines used on shipboard, and of these three years one year may be employed in the drawing office and one year at the day classes of an approved technical college, and the remaining two years should be employed in the fitting and erecting of marine steam engines, either in process of manufacture, or during fitting on board ship, or in repairing when in the dockyard." As an old chief engineer who has had some experience of this sort of thing, I think if we want to really increase the efficiency of marine engineers it will not be created by diminishing the amount of practical knowledge which a man can only obtain by his work and experience in the shop. No doubt it is very valuable to have someone on board a steamer who is very skilful in design or drawing, or any of that sort of experience. One gentleman who has spoken to-night about his experience at sea did not state how long he had been there, but he stated that he had never during his experience had any breakdowns, or any occasion to put in a boiler tube, etc., which he considered was fortunate. I allude to our

friend Mr. Westgarth. I think that was very unfortunate. I think if he had had a little bit of that experience it would have been of great benefit to him. He advises that apprentices should have some tuition in connection with boilers. I agree it is a great advantage, because whether he has any training or not he finds, if he has many years' experience at sea, he has got to do it. It is a very common thing for an engineer to be called on not only to stop a tube but to put a tube in. He has to find the training in some sort of way. The men that we are calling upon to act as marine engineers, more especially at the present time, are men who have not only to receive their education at the shop, but more is expected of them. The great amount of improvements that have taken place in the ship, the introduction of the electric light, and all the auxiliary engines, not only require that a man should be able to use his hands with the hammer and chisel, but that he should use his intelligence to carry out those high and more improved conditions; but if he is only possessed of the hand to make the drawing, and cannot do the important work of repairing when called upon, it is insufficient. It is a great advantage if he does possess this drawing office power, but that must not be put in front of other work. When he is in the middle of the Atlantic he cannot go to A B and C. He has to tackle the work himself and he has got to do it. If he has not had the practical training in the shop he cannot possibly do it. Will two years of practical training in the shop enable a boy to go and tackle the breakdown of a crank shaft, the breakdown of a piston

has never had any actual experience with a boiler under steam. He has seen the boiler in the shop and perhaps put a mounting on, but never knew anything about the generation of steam in that boiler. He would not know how to put the water into it, and as for lighting fires and getting up steam he has no knowledge of that. The same thing applies not only to the boiler but even to the working of the engines while in action. He goes to sea, and he has all these things to learn. If he is put down as a marine engineer and sent to take charge of a valuable ship he knows nothing, practically, about the getting up of steam. He does not even know how to feed the boiler, and more—one of the most necessary things—there are very few young men indeed who go to sea now that have any knowledge or practical experience of what to do to keep a ship free from water. They have no knowledge of the pumping arrangements, or what to do in the case of disaster. A junior engineer boy coming from the shop has to depend implicitly upon the firemen for getting up steam. He cannot tell the men how to do it. Yet he is in power; he is in charge. If there is any water in his bilges he has to be told what he has to do. He cannot learn that in the shop.

The CHAIRMAN—He may in the drawing office.

Mr. SHAW—No, sir; I beg to differ from you. His time is taken up in the shop. He may know that a pipe leads here or there, but he has not the knowledge from actual experience which is the particular valve to interfere with. He must depend upon those on board to teach him what to do. We all have to learn. But if you are going to curtail the training of a boy from five years to about two years in actual work, what is that lad going to do in the case of disaster? If a boiler tube gives way, if a crank shaft gives way, what is this lad to do? He may be skilful, yet having had so little practical experience, is he equal to the task imposed upon him? You must not neglect the education of the boy in the ship itself. Train him to use these useful machines and then he may be of some advantage, but I am sure that many engineers will say that the great evil they have to contend with now is, too many young men are sent to sea as engineers who practically are without any training at all as far as the practical knowledge of the working of machinery goes.

Mr. E. Wilson said—I hope you will treat me with the same indulgence as the other speakers if I do not stick directly to the question as laid down by Mr. Morison. Mr. Morison told us the subject for discussion to-night was the training necessary for an apprentice to make him a qualified engineer. Most of the speakers have wandered considerably from that subject. There is some excuse, too, when you consider the Board of Trade look upon the qualifications for a marine engineer to take charge of any boat under power to be exactly the same qualifications as are necessary for an engineer to take charge of, say, that magnificent Cunarder now down at Swan & Hunter's. The speakers who have gone before have expressed widely different opinions as to what the four or five years' apprenticeship should be devoted to in the shops. Mr. Harrison and Mr. Spencer have between them combined pretty well my own opinion as to what the training should be. As Mr. Harrison pointed out, it is quite possible for an apprentice who has served four or five years to have had about six years in the shops if you count overtime. And he pointed out the system he had in vogue in his own shops whereby an apprentice was shifted from one machine to another and so through the whole range of machinery in the place; and they also allow him to qualify himself to be taken into the drawing office and serve part of his apprenticeship there. One speaker made some comparisons between the kind of training you may get in the evening school and the kind of training and drawing which you would get in the drawing office, and made some remarks about the kind of drawing which you

as my own opinion. It is the experience of several in drawing offices on this river. I am much astonished and sorry to find in this North-East Coast Institution that all the speakers to-night, with all due deference to some of them, are not exactly young men, this being, I consider, a young man's question. We should have had more speakers from among the men who have in comparatively recent years gone through all the Board of Trade examinations, who know exactly what the requirements are, and can speak from experience of them. I do hope before this discussion closes some of the young men who have gone through their shop experiences in comparatively recent times, and gone through their sea experiences, will come forward and express their opinions, and show that the younger members of this Institution by joining in the discussion, if by nothing else, take an interest in this very important question. By so doing they will assist the committee who have to go up to the Board of Trade and enable them to say they have had an expression of opinion from a large number of their members, and so have more weight when they do ultimately come to meet the Board of Trade.

Mr. W. Cumming (of Melbourne) said—I do not know that I can throw much further light upon the subject which the Chairman has brought forward, but one thing that I would support him in is this—I do not think, for the training required by a marine engineer, both practical and technical, that he can become the man that is required of him to go into an engine-room, and have an efficient training in less than five years' time. I know that as a superintendent engineer myself, I always attempt as far as possible to get the most intelligent men into our service. In my experience I have found that that class of men has, as a rule, gone through the drawing office. I have had some men as engineers whom at first, because of their short practical experience, I was somewhat dubious about employing. Force of circumstances compelled me to do so, and in a very short time some of these men gained my confidence to such an extent that, as soon as ever room for promotion presented itself, they got the positions I was able to give them. I can assure you it was done through the sense of security that I felt in these men. At the same time a great deal depends, not only upon

the course of training through which a man has come, but largely upon the man himself. While I think that you want your engineers all to have a good theoretical training, the practical side must not be neglected, as this is a most necessary qualification of the marine engineer, in order that he may be able to maintain the machinery placed under his care in the highest state of efficiency. While some of you gentlemen here spoke in favour of the theoretical man being in charge of the engine-room, it is also necessary, in the case of a breakdown, that not only should you have a man who can grasp the situation and direct the repairs necessary, but who should also be able to carry out the repairs in a practical form. I do not think it would be correct that the man in charge should only be able to tell how the thing has to be done, but he should also be able to do it himself. In fact, in a case of that kind, when a breakdown takes place, the superior officers of the engine-room have to turn to and tackle the matter themselves in conjunction with their subordinates. There is another matter, which may be somewhat beside the question, that I would like to bring under your notice, and that is, that while you should suggest to the Board of Trade a remodelling of their regulations, I think there should be an assimilation of these regulations with those of the British dependencies. I believe there is some irregularity now existing in that respect. For instance, New Zealand is pretty well known to be one of the most vigorous countries in modern legislation, but all its legislation is not perhaps acceptable to everyone. In regard to their laws they have gone one further than the Board of Trade, because they have legislated that a sea-

influence the New Zealand Legislature. However, I think something might be tried in that respect. As far back as 25 years ago, the young men in the British dependencies, such as Australia, New Zealand, the Straits Settlements, and Singapore, were placed at a great disadvantage in obtaining certificates equivalent to those obtained in this country. To facilitate this matter, certain ports were nominated, with examiners appointed to examine those engineering candidates who had complied with the present Board of Trade requirements. If they successfully passed their examination they obtained a certificate equivalent to what they would have obtained had they been examined in London. I think that, as far as possible, this should obtain throughout Great Britain and her dependencies. I do not think there should be any difference in that respect, so that any alteration you may get the Board of Trade to make in their existing rules should be obtained with the view of having it the same, if possible, in all the British states. I do not know that I need say anything more. I think we all agree that we want, if possible, to raise the standard of the young engineers, and that this can best be obtained by a combination of theoretical and practical training during an apprenticeship of five years.

Mr. Harold Thomson (of Sunderland) said—There was an appeal just now for young engineers to come forward and speak. As one who is comparatively young, and who holds a chief engineer's certificate, I may perhaps be allowed to say a few words. My opinion is that in training a marine engineer there are several qualities required besides that of skill in using tools. In a big ship you have a large number of men under you—men who are rough men, and who require a good deal of managing. A man requires a good deal of tact, intelligence and courage to carry out his duties under these circumstances, and I do not care how long he may have been serving his time at the trade, or how clever he may be at filing a surface or fitting an engine together, if he has not these qualities he will never make a successful sea-going engineer. If you are going to have a five years' apprenticeship you must be careful how you word your regulation, because if you take "apprenticeship" to mean time served before the age of 21 (which is its usual meaning) you make it necessary for a boy to leave school before he is 16 years old. In my opinion that is far too young. At 15 a boy is

getting towards the top of the school, and it is then that he is laying down the foundations of his future character for energy, courage and intelligence. So that, while agreeing with the proposals set forward, I think it ought to be made quite clear that the apprenticeship can be extended beyond the age of 21. In this district we have been introducing schemes for the encouragement of technical education amongst young engineers, but if they are taken away from school at the age of 15, when they come to attend evening classes at technical colleges they are often so ignorant of the elementary principles of mathematics that you cannot teach them anything in the higher branches of engineering. One gentleman spoke about the uselessness of drawing office training for sea-going engineers. I do not agree with him. Of course, if he is going to spend all his time in the drawing office that would be absurd; but I think that three and a half to four years in the shops and a year or a year and a half in the drawing office would be about the correct thing for a marine engineer. With regard to what another gentleman said with reference to junior engineers at sea with drawing office experience, I consider that, if such a man cannot tell which valve to open to pump out the bilges, he must have so little intelligence that he should never have been allowed in the drawing office at all; and I certainly think that it will be a step in the right direction if a certain amount of drawing office time is allowed to count.

Mr. G. Berwick (of South Shields) said—I think the point of the discussion has been lost. When an apprentice has gone

design a lot of things, but he is there to repair them if they break down. I think the right lines to go upon would be either to propose to take what may be termed by some a retrogressive step of insisting upon them going through the stokehold, or make the period for them competing for the second-class certificate of longer duration. It is not only a question of the knowledge of designing and repairing engines that is wanted, it is a question of upkeep. As one speaker pointed out, some would not know how to set the fires away. A man can only gain that knowledge by practically dealing with them, and twelve months is not long enough. Five years is the minimum anyone should take to acquire practical knowledge alone, and any young fellow who wants to go to sea, if he has the advantage of serving his apprenticeship as I did, under an employer where he is offered facilities to obtain a knowledge of the different branches, has a better chance. I went through the mill, including the blacksmiths' shops. I was allowed liberty, and not specially tied down to any one machine. I think that drawing is certainly necessary for an engineer, but that can be acquired in evening classes equally as well as in the drawing office—not going to the evening class and being taught a certain rote or line, but when a lad has served in the workshop he knows what a bolt or a machine is like and in the evening classes he is guided by his teacher to lay the lines in their proper place and form, and I think these are proper lines for the drawing of any part of an engine. I do not think there is anything better than evening classes, combined with practical knowledge during the day. Anyone who is anxious to get on will certainly attend the evening classes. Boys play in the drawing office just as they do in the shop, and I think five years is the least term of apprenticeship for an adequate training in the use of machines and tools. I should say more time served the better, because you do not find all the auxiliary machines made in every shop. In many shops it is only the main engine that is made, and to get to know all the ins and outs of all the small gear that they are called upon to overhaul on board ship, I think five years is the least that should be served for a fitter; but the training for an engineer certainly ought to be extended by going back through the stokehold, to learn to chip, paint, and take care of things, and to learn how to fire. It is now a question of being able to go into the stokehold and direct the men there as to what you want, and more

especially since there has been an introduction of water-tube boilers which require careful firing, and I think it would be to the advantage of the engineer that these regulations should be extended to five years or to have a longer period as a second engineer.

The CHAIRMAN said—I think the members of the Committee present have to thank you, gentlemen, for your presence to-night, and for the very thorough way you have discussed this subject. We can go back fortified with the benefit of your experience. The term of five years seems to be endorsed. With regard to the other matter, a very important error seems to have crept in to all the remarks. There is no intention to exclude a man from the engine-room who has worked for five years in the fitting shop. What we are trying to do is to prevent the Board of Trade excluding a lad who comes down to our works with the idea of becoming a sea-going engineer and who bye-and-bye finds there is a certain value attaching to the drawing office. If he is a plucky, hard-working lad, his ambition is kindled and he wants to go into the drawing office. So he works all the harder. He may be a better chipper, a better fitter and a better time keeper. It would be hard lines to handicap that boy by saying, "Because of your superior knowledge and ability, we select you and put you into the drawing office, but you cannot, therefore, go to sea." We do not wish to debar the boy who by his talents has succeeded in getting into a drawing office or into a college. We think the time has now come when, in consequence

The following communications have been received:—

Communication from Mr. J. H. Irwin:—

SUNDERLAND,
18*th February*, 1905.

DEAR MR. MORISON,

I have been prevented until now replying to your favour and egret the delay.

Having given some attention to the proposed new regulations elating to the examination of engineers for the mercantile ervice and the suggested modifications by the North-East Coast Committee (with these I agree), I feel they do not advocate a ufficient departure from the original rules.

Whether or not it would be a wise policy to ask for a more omplete revision is an open question.

The "powers that be" in the marine department of the Board f Trade are so very averse to any interference, that probably the eport goes as far as we can expect them to meet our views. Personally, I feel very strongly on the point of three years being pent in learning how to handle the hammer, chisel, and file (for his is really what the meaning of the new rule comes to), as ny time between one or two years should be sufficient for this urpose, leaving the rest of the term of apprenticeship for service n the other departments, these being of fully equal importance.

There is one point, however, the report should, in my opinion, nclude, viz., the second class certificates ought not to be granted ntil the candidate is 22 years of age, this in lieu of 21 years, as iven on page 10, clause 22. The age for chief could then become 3 years. This point ought to be pressed for, for 21 years is too oung an age for a man to be in charge, and it is also an inducenent for apprentices to get very unsettled when the end of heir apprenticeship approaches, unfortunately for their own best interests, and unfairly to the firm who are giving them their raining. If the Committee can get their report adopted (with r without the above alterations) they will have done good work.

It seems to me, however, that considering the taxes we have o pay for free education, the sums privately subscribed and the pportunities given by the employers and others for training pprentices and students in the engineering calling, we ought to ave a higher standard for men now at sea than those considered

necessary in the years past, when engines of limited power, with low piston speeds and low pressures obtained, and these without electric and other auxiliary fittings. There ought now to be a third, second, first and extra first certificate, the third and second being equivalent to the present second and first, the higher grades to qualify men for engines of exceptional power or for ships fitted with exceptional auxiliary machinery.

The Board of Trade, the shipping world, and all interested should keep in mind that the bulk of superintendent engineers in private firms, the officials of the Board of Trade, Lloyd's, Veritas and other classification societies, and many factory managers are drawn from sea-going engineers, and it should be insisted upon that a thoroughly efficient apprenticeship in the various branches of the trade and thorough shop training be secured, together with technical education to pass examinations, to enable these officials in their turn to train good men for the future, so as to keep our country still in the premier position amongst the competing nations of the world.

These higher qualifications would enable the men holding them to be a most efficient reserve for service in our Royal Navy in time of war. The addition of higher grade qualifications ought not to be considered a hardship to the ordinary artisan class of men, for they have at hand every opportunity for study and improvement if they care to avail themselves of them.

Please excuse me not writing in more detail, but I am anxious not to further delay my answer to your favour of the

to pass you the following communication and I desire to thank you for copy of the various speakers' remarks, which I have read with great interest.

No doubt many members of the Institution will remember the agitation upon this subject which was promoted by the Institute of Marine Engineers in 1893, and which led to a circular letter being issued by the Board of Trade to various Institutions asking for observations in particular as to whether "the minimum period of apprenticeship for marine engineers should be raised from three years to five years." At the request of the Council, the writer drew up a short paper to facilitate discussion, which was read before the Institution on 16th January, 1894. The subject was well thrashed out, both in Council and in general meetings, with the result that the Council submitted to the Board of Trade the following resolutions:—

1.—Every person who presents himself for the first time at a shipping office to sign articles as junior or assistant engineer shall prove to the satisfaction of the shipping master, by documentary evidence, that he has served a five years' apprenticeship [*or not less than three years' apprenticeship and two years as improver or journeyman*] on the making or repairing of engines (not necessarily marine), and that during at least two years of such services he shall have been engaged at "erecting" or "fitting," or "working on board steamers at the propelling machinery;" and that service in the drawing office shall count full time.

2.—That a third class certificate should be granted, but it is desirable this certificate should not be compulsory to all engineers.

3.—All foreign-going steamships carrying four or more engineers, or in all steamships of 300 N.H.P. and upwards, the third engineer shall be a certificated engineer.

4.—A candidate for a third class certificate shall have served twelve months at sea.

5.—A candidate for a second class certificate shall have served *two* years at sea instead of *one* as at present required.

6.—Clause (*b*), paragraph 35, in the Board of Trade regulations to be annulled.

The decisive expressed opinions of various Institutions moved the Board of Trade to make some important alterations

in their rules, although there was much left undone. They agreed to four years' apprenticeship and would have agreed to five years, but there was strong influence exerted in opposition, so that the five years' apprenticeship had to stand over. I quite agree with Mr. Morison that the time has now arrived when a further enquiry may well be promoted, and I am quite in accord with the views he has expressed. As one anticipated, and very naturally, on such a subject, speakers got beyond the intention of the Committee, which Mr. Morison particularly drew attention to, was to discuss the question of "apprentices who are to become certificated marine engineers." There is one peculiar feature which appears to pervade the remarks of most of the speakers, and that is, that after an apprentice is out of his time he should be able to take a berth as a qualified sea-going engineer. All those who have had sea experience know, however qualified an apprentice when out of his time may be as a fitter, turner, draughtsman, etc., he has practically another apprenticeship to serve when he joins a steamer, as the running of engines and boilers under sea-going conditions is very different to the construction or repair of engines, and experience tends to confirm the view that the first twelve months at sea is really occupied in this second apprenticeship, and this was really the opinion of the Council when they, in 1894, suggested clause 5, "a candidate for a second class certificate shall have served *two* years at sea, instead of *one*, as at present required." There is considerable safeguard at the present day in this, in that it is very rare, except in small boats, that an engineer

ıajority of young men on first going to sea are absolutely nable to properly let together bottom or top end brasses, chip ıd file the liners to a true and proper face, etc. A sea-going ıgineer should have sufficient mechanical knowledge and skill ı keep his machinery in proper working order and a fair ·chnical knowledge to understand the principles on which the ıachinery works. Some knowledge as a draughtsman is of reat use, but he is not required to enter into the design of ıgines, and the education given at night classes in technical ·hools should fit him for his work. In the broad sense, he ɔes not require to be a highly trained scientific engineer. uring many voyages there is much time and opportunity for ·lf-improvement and reading, but I am afraid sufficient con-deration is not given to this. For the reasons I have given, am fully in accord with the Committee's proposals, particularly ı to the necessity of five years' apprenticeship, and this apprenceship passed in various departments, in which the time passed each department should count full time. I also feel strongly ıat at least one night a week should be given to attending ght classes, in conjunction with home work. This communition has already extended to such length that I feel I cannot ıter into all the considerations *re* auxiliary machinery, such ı important feature to-day in a sea-going engineer's ıalifications.

Yours faithfully,

J. R. FOTHERGILL.

Communication received from Mr. W. C. Borrowman, Vice-·esident (of West Hartlepool):—

HUNTLY, BISHOPSTEIGNTON, NEAR TEIGNMOUTH,
March 20th, 1905.

EAR MR. DUCKITT,

I regretted my unavoidable absence from the special meeting ·ld on the 3rd inst., to consider the attitude of the Board of ·ade towards apprentice marine engineers who present themlves for examination with a view to obtain the Board's rtificate.

My recent letter to the Board's Consultative Committee arose ıt of a difficulty we are frequently experiencing at the Central arine Engine Works by the refusal of the Board's examiners

to admit some of our best apprentices for examination, owing, as these officials state, to the course of apprenticeship not being satisfactory. This accusation is based on an alleged non-compliance with the written law as set forth in the pamphlet of rules issued by the Board of Trade for the guidance of these engineer candidates who desire to hold the Board's certificate.

Unfortunately, the local examiners have no liberty to depart from their printed instructions, but when we remember that these rules have been in operation for a quarter of a century, this fact alone should suggest a reason for undertaking a careful examination of their several conditions as to their suitability as guides to-day. When they were framed, marine engineering at sea was a much simpler and less exacting duty than it is now, and the average sea-going engineer of those days was little more than an "animated oil pot," and it was, and still is, possible for a stokehold hand or greaser, to graduate to the rank of engineer, certified for competency by the Board of Trade. In some instances this type of engineer is still in evidence. Frequently we meet certificated engineers who refuse to accept situations on vessels into which are installed any novel features of design and arrangement, or where slightly complicated auxiliary machinery is fitted that calls for intelligent attention. Happily this class of man is dying out, but he is still encouraged by the conditions imposed by the Board of Trade, while well trained and educated youths are debarred from examination by these same rules. All this is regrettable, and the pity of it is emphasized by the fact that some of the Board's officers themselves are not conversant

Such a development of engine-room duties demands a corresponding development in the training of those who are to undertake them, and apprentices have, consequently, more to learn and require a requisite and properly arranged period in which to do so. Any period short of five years is not sufficient, and the most useful subdivision of this period in the several departments of an engine works requires most careful consideration. Three views of the subject present themselves to our notice, each of which has an individual importance of its own. There is that of the manufacturing employer. How should he employ his apprentice so as to obtain from him the most economical service? Clearly this end would be served most easily by keeping the youth in one department on few details during the whole of his apprenticeship, thus making him expert in this department only.

There is that of the apprentice himself. To become a first-class marine engineer demands skill in the ordinary practical undertakings of the workshops, both in the preparation and putting together of the details of an engine or any other machine, and this skill can only be realized by service in more than one of the several departments.

Then there is that of the shipowner into whose service, as a sea-going engineer, the apprentice ultimately graduates, and for which service it is his intention to train himself, so as to be able to undertake, in a responsible and satisfactory manner, the duties involved.

That all these interests may be satisfactorily served, it is now necessary that the training of an apprentice should embrace both the practical and theoretical sides of his profession, and to enable this to be so it is necessary to determine not only the period of training but the subdivisions of it as well. That a change is necessary is obvious in view of the entirely different circumstances accompanying modern workshop practice compared with that of twenty-five years ago. Then the art of "fitting" was a necessary part of the training of an engineer, when the accuracy of adjustment of engine parts depended almost entirely upon the manual skill of the "fitter," and when it was even the practice to leave the determination of the final dimensions of many of the parts, such as valve gear rods and spindles, and the adjustment of valve gear generally in his hands. Now, with the development of drawing office practice,

and the introduction of modern machine tools, whose precision and accuracy make it possible to finish completely the several parts of an engine, the "fitter," as formerly known, has disappeared, his duty now being merely the gathering and grouping together of the parts already finished to gauges by the machinemen, the accuracy of these parts being so assured that the term "fitting," as a process in the building of an engine, is a misnomer.

Machining, embracing turning, planing and the other processes undertaken by machines, has now become such a prominent and important factor in the economics of practical mechanical engineering, that no youth, desirous of knowing his business, either as a workman or an employer, should miss experience in it. Such a training develops a practical sympathy between the eye and the hand, and gives him a proper appreciation of the necessity for exactness and correctness. The late Sir Joseph Whitworth attached so much value to this ability to work correctly, that he made it one of the conditions to be satisfied in the competitions for his scholarships.

After a period of training has been spent at the machines, the apprentice will have more interest in graduating into the other departments where the construction of the various units of an engine is undertaken, and thence to the erecting of the engines as a whole, finishing his period of training with the staff that erects the machinery and boilers on board ship.

With the splendid educational facilities now so common in manufacturing centres, apprentices may, and do, carry on their

Carefully regulated study of subjects bearing upon his profession is a relaxation and recreation to a healthy youth, and such courses can easily be arranged without any risk of overtaxing the energies of any one concerned; and besides, apart from the incalculable benefit, professionally, that follows such study, there is the splendid discipline it exercises over the student, a feature in the training of some of our modern youths unknown.

Such a survey of the whole question suggested, six years ago, the necessity for a re-arrangement of the apprenticeship period at the Central Marine Engine Works and the following scheme was introduced. The apprenticeship, as before, to be for five complete years, the entering age to be 16 years and the division of the time to be as follows:—

Training in the turning and machine shops...	2 years.
Training in the finishing departments and those where auxiliary machine and all mountings are completed	2 years.
Training in the erecting shops, in sheer legs department and on repair work... ...	1 year.

The above represents the *average* apprenticeship at these works, and the wages paid during the five years are six, seven, eight, nine and eleven shillings per week, no advance being given till a complete year in each stage has been served.

Modifications in the above divisions of time are allowed to those apprentices who merit them. For example, if a lad shows aptitude in mastering machine work, his graduation to another department may take place at the end of eighteen months instead of two years. Again, every apprentice, in all departments throughout the works, after entering his fourth year, and with good time-keeping, good behaviour and approved progress in his work to his credit, becomes eligible as a candidate for entrance to the drawing office. This promotion is determined by competitive examination, and usually the best lads are thus secured. It has been these best lads who have served five years in turning and machine shops, finishing and erecting shops, and drawing office, who have been refused admission to the Board of Trade examinations.

Officialdom, swathed in such red tape, penalises superior training, puts a premium on mediocre attainments, is a drag

to progress and so ought to cease. We have comparative figures which show that the encouragement we are aiming at giving our apprentices is for the good of all concerned. It is a condition of their service that they attend evening classes and the special marine engineering class which is conducted at the Technical College for apprentices in their last year.

Apprentices who keep perfect time, who satisfy their foremen with their progress in the shops and who attend evening classes and pass the examinations, have their class fees paid for them, and they become entitled to an advance of one shilling per week over and above the normal rate of wages due to them. This system has been in successful operation for some years, and it is becoming a growing custom amongst our neighbouring firms, who one and all subscribe to its beneficial results.

It is with the intention of bringing all these facts before the officers of the Board of Trade who control the rules affecting engineering apprentices that the present prominence has been given to the matter, and with a view to convincing them of the urgent necessity of altering these rules so as to be abreast of the times.

Yours faithfully,
WM. C. BORROWMAN.

Communication from Mr. John H. Buchanan:—

OSWALD CHAMBERS, GLASGOW,
29th March, 1905.

DEAR MR. DUCKITT,

[redacted]

ment at sea may be restricted—an absolutely vain hope, in my opinion—and I am entirely in agreement with Mr. Borrowman that one result of the stipulation as to how a lad's time is to be employed in the workshops, in order to qualify him to become a sea-going engineer, is to reduce the standard of capability of those likely to go to sea by shutting them off from many opportunities they would otherwise have.

I would here like to make it most clear that I do not express an opinion of any kind against the action of the sea-going engineers, their Society, their leaders, or the very able teachers who instruct them for their certificates. If they think fit to advance what they consider to be their interest by agitation to have these restrictions made, they are perfectly entitled to do so through the Board of Trade or otherwise. If, however, we are asked by the Board of Trade, through our representatives on the Consultative Committee, as I take now to be the case, I consider it is an absolute duty to bring the whole influence of the Institution to show that the supply of trained engineers is most ample, and likely to continue to remain so; and that the proposed restrictions as to employment in certain departments are suggested mainly to restrict that supply, in the interests of those already at sea, who, in the first instance, have started the question.

In conclusion, I may say that, if any one wants sea-going engineers with any particular proportion of workshop training, the supply is practically unlimited. In my own practice, although I have only to keep up a staff of about 100 men at sea, I have daily applications from all parts of the country, and, if it were a question of years served in marine engine fitting or erecting, I judge from these applications that any number of men are available who have worked from 5 to 7 years in these branches, and are waiting to get to sea on most moderate terms.

For the encouragement of those and others of their age, I would like to add that my close observation of this branch of our trade for the past 30 years, convinces me that they are now at least as able for their duties as were their fellows at any time in the period I have named. The duties may have altered somewhat, but so have the opportunities to study them, vastly more so.

Yours faithfully,

JOHN H. BUCHANAN, A.M.I.N.A.

NORTH-EAST COAST INSTITUTION OF ENGINEERS AND SHIPBUILDERS.

TWENTY-FIRST SESSION, 1904-1905.

PROCEEDINGS.

SEVENTH GENERAL MEETING OF THE SESSION HELD IN THE LECTURE THEATRE OF THE LITERARY AND PHILOSOPHICAL SOCIETY, WESTGATE ROAD, NEWCASTLE-UPON-TYNE, ON FRIDAY EVENING, MARCH 17TH, 1905.

C. A. BUSHELL, ESQ., MEMBER OF COUNCIL, IN THE CHAIR.

The SECRETARY read the minutes of the Fifth General Meeting held in Newcastle-upon-Tyne, on Friday, 24th February, 1905, which were confirmed by the members present and signed by the Chairman.

The SECRETARY read the minutes of the Special Meeting held in Newcastle-upon-Tyne, on Friday, 3rd March, 1905, which were confirmed by the members present and signed by the Chairman.

The discussion on Mr. Frank Little's paper on "Petrol Motor Cars" was resumed.

The discussion on Mr. J. F. C. Snell's paper on "The Application of Electricity to Industrial Purposes" was resumed.

RESUMED DISCUSSION ON MR. FRANK LITTLE'S PAPER ON "PETROL MOTOR CARS."

The SECRETARY said—Mr. J. R. Fothergill, one of our Vice-Presidents, intended to open this discussion, but I have received a letter from him this morning saying that owing to ill-health he is not able to be present.

The CHAIRMAN—We are very sorry to learn Mr. Fothergill is still unwell. We regret his absence, as he has had considerable experience with motor cars.

Mr. WILLIAM PHILIPSON (by permission of the Chairman) said—It is very kind of you to ask me to speak. I think we are all indebted to Mr. Little for the clearness with which he described the different parts of a motor. The lantern slides illustrated the different parts almost better than if we had had a real car in the lecture room. As to the points that Mr. Little drew attention to, I wish to say I quite agree with him as to springs. The tendency in building motor cars at present is to have longer springs than formerly, and I think it is a decided advance. The motion of a long spring is not so jerky as that of a short one, and for a car going quickly over the road you want the action to be slow and steady. The action of a short spring, in going over a crossing, say, is to cause the wheels to leave the ground. They rise until you can see daylight beneath them and then the car descends with a shock. It is uncomfortable for the passengers, it is serious for the car and it increases the draught considerably.

The next point in the paper I wish to refer to is about the steering gear. It is usually by the Ackerman or hinged axle. It is an old idea. Coach-builders used it as far back as 87 years ago. It was revived in America 25 years ago, and since the introduction of motor cars it has been almost universally used; but I think if some of your members would go into the question it could be considerably improved. In a carriage it is important to have the wheels parallel to each other and at right angles to the axles. Otherwise the wheels do not revolve freely but skid on the ground. Illustration R (page 139) in Mr. Little's

paper shows the wheels at a turning. These wheels when turned, instead of being parallel to one another, point to one another—that is, if the lines were projected they would meet. If you have the drawing, you will see how the action is caused. The result is that these two wheels are not parallel with one another, and therefore one of them has to skid, and the carriage or motor car is not moving freely. It goes by one of the wheels slipping or skidding, and I maintain that that really is one of the causes of the trouble in side-slipping. These wheels cannot go round without side-slipping, and once you get a car side-slipping, you lose control. You can turn one way, and it slips the other way, and if the roads are greasy you make a wonderful curve and sometimes you get bumped up against a telegraph post or other obstruction, which you do not forget. I think there ought to be some method of arranging the axle to get the car to turn without necessarily making one of the wheels to slip sideways. When I was over at the motor-car exhibition, in Paris, I saw a car whose patentee professed it had no side-slip, and both front and hind axles were hinged. They should be connected more like the bogies in the corridor trains, where you have the whole of the wheels running true, whatever the angle of the road. The idea was admirably illustrated by a model. There was a large table, and an arm with a cable, and behind the cable came the car. The first one was fitted with the ordinary steering with one-hinged axle, and the others followed with the double-hinged axles, and turning the arm round and round you got one car running true, but the other car was con-

There have been a lot invented, but I have not seen one yet that is really puncture-proof, although they are a great deal better now than they were. But I cannot see the advantage of the solid tyre over the pneumatic, except in the fact that it is unaffected by puncture. The great advantage of the pneumatic tyre is the great reduction in vibration and increased life of the car. You do not shake your machinery as with the solid tyre; and then there is the saving in draught. These are two very strong points. The difference between a solid and pneumatic tyre is often 25 per cent. draught—it depends on the condition of the road. And the third thing is the advantage to the passengers. You cannot ride in a car with solid tyres quite as easily as you can with pneumatics. The solid-tyre carriage may have extra easy springs, and, as I said at first, springs are being made much better than they were, but at the same time there is a lot of difference between the two tyres, and it is impossible to get as full ease with the solid tyre as you can with the pneumatic. Mr. Little has figures to prove the hill-climbing properties of solid tyres, but still, taking it all round, I think the future car will have pneumatic tyres.

Mr. R. Wallis said—There are some points in Mr. Little's paper which he might explain more fully, especially in dealing with the details. I would like Mr. Little to explain what are the objections to the two-cycle engine. The two-cycle engine has been used to a much greater extent for motor boat use than it has been for the car. Its simplicity, having no valves and no cams, appears to have much to recommend it: possibly its efficiency is lower, but Mr. Little might explain to us exactly what the difference is. Regarding the speed of revolution, if you look over a list of cars you will find for a given horsepower speeds varying from 750 to 1,500 revolutions. There must be some point at which you will obtain the highest efficiency for the rated horsepower and the best range up and down. I would like Mr. Little's opinion as to the best revolutions for the engine of a car to run.

I have had some experience with carburettors. The ideal carburettor will give a correct mixture for all requirements. You require a rich mixture when driving the car at its maximum speed on a level road and also when hill climbing, the engine running at varying revolutions according to the gradient. You

also require a weaker mixture varying with the speed down to the lowest revolution at which the engine will run. In order to do this with the maximum efficiency, there should be no throttling of the inlet, in order that the maximum compression may be maintained under all conditions, especially with the weaker mixtures. Many owners purchase powerful cars of 20 to 30 horsepower in order that they may be able to maintain on the top gear a desired speed in a hilly country and consequently the engine power varies considerably, running for long periods at half or even less than half of its rated power. This will possibly account for the high petrol consumption of some of these high power cars, especially where they are driven very much in the crowded traffic of our big cities and their suburbs. Very few carburettors, together with the governor control, will fulfil these conditions, failing principally in that of throttling the inlet, and so reducing the compression. One that Mr. Little illustrated on the screen, the surface carburettor, gives these conditions more nearly than any of those described and may account for its higher efficiency as shown on the diagram.

Another detail illustrated is ignition. Magneto ignition involves increased details on your car, complicating its mechanism and giving you more running parts, with their consequent trouble to maintain. On the other hand, with accumulators there is always the uncertainty of their maintaining the required current; between these two evils you have to choose which you consider the least. Accumulators, if you are fortunate to get them to run well, and have convenient means

The front end of the mechanism of the motor is rather inaccessible; if placed behind the motor it will render the front end of the motor, with its governor, pump, half-time shaft, and all the smaller details, much more accessible, and if the flywheel is constructed to act as a fan you would then get the hot air discharged underneath the car, whereas now, when climbing hills, or when running slowly on a hot day, it rises into the faces of the front passengers.

Clutches are also another detail which trouble a great many, and I quite agree with Mr. Little that a satisfactory clutch is a most difficult thing to secure. It should be impossible to put a clutch into gear too quickly; at the same time it should pick up the speed gradually, but not too slowly. There are very few clutches that will do this at all satisfactorily. The danger is that the clutch goes in too quickly and causes a shock to the gear or too slowly and the car loses way.

Gearing is also a difficult problem. Most of the types fitted are more or less defective.

Sliding Gears: With this type of gear it is not always an easy matter to slide a gear from one speed to another at exactly the right moment; to do this smoothly and quickly is rather a nice operation, and even experienced drivers sometimes miss the gear and the result is that the ends of the teeth are worn away. The clutch type is objected to by some because the whole of the gears are always in mesh and running. The ideal gear, if one could achieve it, would be a gear that would give a gradual change from the maximum to the minimum and at the top speed the drive should be direct, with the running gears all cut out or the mechanism revolve as a whole. Anyone that can do this in a simple and satisfactory manner will greatly improve a troublesome detail in car construction.

Transmission Gear: The transmission of the power to the road wheels appears to be pretty well divided by the various makers between the live axle drive and counter-shaft and chain drive. I should like Mr. Little to tell us what are the disadvantages of these two methods of transmission. The live axle, with its enclosed gears away from the dust, and its absence of chains, seem to have many advantages to recommend it.

The brakes on the road wheels sometimes give trouble. Internal band brakes with live axles often slip with the grease

working through from the axle. The details of the mechanism which apply the brakes should be designed with a compensating arrangement in order that the same pressure is applied to both brakes.

Communication from Mr. A. E. Berriman:—

WEST HAMPSTEAD, LONDON, N.W.,
15*th March*, 1905.

DEAR MR. DUCKITT,

There is no doubt that Mr. Little has brought before this Institution a subject of immense importance. Whatever may be the personal feelings of individual members who have listened to Mr. Little's paper, one and all will be forced to admit that it treats of a subject which will shortly be an all-important factor in the economy of our daily existence. Considering that this is the first paper on motor cars which has hitherto been read before the senior section of the Institution, I think Mr. Little is to be congratulated in having opened up a wonderful amount of debatable ground in such a remarkably concise contribution. Several details touched upon provide the Patent Office with a constant source of revenue. Carburettors, for instance, are invented by the score and some of them are fearful and wonderful devices. The object of them all is ostensibly the same as that mentioned by Mr. Little, viz., to compensate for the increasing suction effect on the jet at high engine speeds. One of

The clutch is one of the most important parts of any car, but on commercial motor vehicles it assumes enormous importance when considered in conjunction with the change-speed gear of the ordinary sliding-spur-wheel type. The multiple disc clutch, of which one type was referred to by Mr. Little, has the characteristics most desired, viz., an automatically progressive action in taking up the load; unless, however, it is provided with a positive means of separation, these clutches are liable to stick after the clutch spring has been thrown out of action. Some of these clutches have flat springs between each plate for this purpose, but only one—the Bradley—has hitherto embodied a really positive means of separation. Altogether the commercial aspect of the petrol motor car is very much bound up in the clutch and the change-speed gear. The more "fool proof" both are made the greater will be the chances of rapid success.

Mr. Little refers to the use of live axles and suggests that cars of this type are limited to those of "moderate power and weight." It is interesting to note, however, that Mr. Mark Mayhew's 100 H.P. Napier racer has a live axle, as has the 80 H.P. Napier which was driven by Mr. S. F. Edge in last year's Gordon Bennett race. In the same category is the famous six-cylinder 90 H.P. car of the same make which, while in America recently, established a world's record for five miles at a speed of 91·37 miles per hour and is unofficially credited with having covered the mile in 34 secs. = 105·88 miles per hour. This is sufficient evidence that live axle cars, properly made, compare favourably with chain-driven vehicles. Badly made live axle cars tend to splay at the wheels, due to insufficient support for the axle, which is, of course, discontinuous at the middle on account of the differential gear. A good plan is to mount the wheels on the axle casing and use the axle itself merely as a driving shaft, so that it is [illegible] to torsional strains only. The Hoffman bearing, [illegible] 146), is a good form of hub, and is also [illegible] the case mentioned above. [illegible] ball bea[illegible] the right place when properly [illegible] vision must always be made [illegible] " bearing of any end thrust [illegible] 'double compound" wear [illegible]

Mr. Little also refers to that important subject, the steering of cars, and the illustration R gives the general principle of the Ackerman system. As Mr. Little points out, the knuckles A F and B E (illustration R, page 139) generally converge about the centre of the rear axle. Wherever they converge, however, the wheels are absolutely true for two positions only—when running straight and in one other particular position which is dependant upon the point of convergence of the arms A F and B E. Mr. C. H. Gale, A.M.I.C.E., has scientifically analysed this problem in an article which appeared in the *Automotor Journal* of April 23rd of last year, and in which he makes the interesting statement that "for all cars the correct converging point for the arms of the bell cranks should be between three-fifths of the wheel-base forward of the rear axle for short cars, and midway between the front and rear axle in the case of long cars." With regard to the actual steering gear itself, the worm and quadrant is, as Mr. Little remarks, one of the most popular types. When worn, however, it is liable to jamb at "full lock," and to counteract this the Wilson Pilcher cars—now made by Sir W. G. Armstrong, Whitworth & Co.—are fitted with a very carefully thought-out adjustment. Referring to illustration S (page 140), it is important, for obvious reasons, that it should be impossible for the rod F to fall off should the buffer springs, which hold the blocks G and H in place, become broken.

I have touched upon but a few of the many points in Mr. Little's paper, and I very much regret being unable to be present at the meeting on Friday night to listen to the remarks

RESUMED DISCUSSION ON MR. J. F. C. SNELL'S PAPER ON "THE APPLICATION OF ELECTRICITY TO INDUSTRIAL PURPOSES."

The SECRETARY said—I have a telegram from Mr. Snell to say he is exceedingly sorry he cannot be with us to-night, because he is detained at a Parliamentary Committee meeting in London.

Communication from Mr. W. C. Mountain:—

17th March, 1905.

DEAR MR. DUCKITT,

I was unfortunate in not hearing Mr. Snell's paper read, but I have read the paper myself with considerable interest, and Mr. Snell, to my mind, appears to touch upon a most important subject, namely, the economical distribution of electricity to works and manufactories of all kinds, and I think the Institution is to be congratulated upon having such a very practical paper placed before them by a gentleman so thoroughly competent to deal with the subject.

There is no doubt that electric supply companies will play a most important part in the near future, and the fact that manufacturers are able to get a supply of current for their works or colliery owners for their collieries at a reasonable price will very gradually add to the work of the manufacturer of electrical machinery and at the same time effect important savings to the consumers of electrical energy, and I therefore hope that in my remarks I shall not be considered hostile in any way to electric supply companies, but I am sorry that I cannot accept some of Mr. Snell's figures as, in my opinion, quite correct.

Mr. Snell, in the early part of his paper, touches upon one point, namely, the standardization of electrical machinery, and this, of course, refers particularly to three-phase machinery. The Engineering Standard Committee have, I understand, recommended a periodicity of 50 and 25 cycles for three-phase motors

and 250 and 500 volts, and it seems strange that in the North of England we have 40 cycles and 440 volts, and in South Wales, I am informed, one of the power companies have 50 cycles, 40 cycles and 25 cycles. This makes it extremely difficult for manufacturers to standardize their machinery, and I shall be glad to see power companies fall into line.

The next item to which I would like to take exception is Mr. Snell's estimate of the cost of the power plant in connection with an installation in a works or colliery, and I only wish, as a manufacturer, that the figures which Mr. Snell quotes were the figures which ruled the market prices to-day.

Dealing with one or two colliery power stations which my firm have in hand, I can give some figures which are absolutely accurate as regards the cost, as under:—

For a colliery near Newcastle, where we are installing two sets of slow speed horizontal engines of the coupled compound type of 300 K.W. each, together with boilers, including the cost of power house, feed pumps, steam and exhaust piping, the total price comes out as under:—

Two sets of engines and dynamos, 300 K.W., say	£5,800
Three Lancashire boilers	1,500
Feed pumps, steam and exhaust piping	250
Main switchboard	300
Connecting cables, say	100
Cost of engine-house and boiler seatings, large enough to contain three sets of engines and dynamos	800
Erection	250
Total	£9,000

or at the rate of say £12 per K.W. installed, or £18, assuming that one of the units is a stand-by.

These figures are, of course, based on a colliery having to put down a new boiler plant—in fact, a complete central station —but where manufacturers or colliery owners have buildings available and steam power also available, then the cost of the generating plant at a colliery is very much less. Therefore, I think that Mr. Snell's figure of £45 per K.W. is about three times too much.

In considering the cost of producing electricity at a colliery compared with the cost of purchasing it from a supply company, collieries are, as a rule, in a very favourable position, because they have a large amount of coal of an inferior character which it is almost impossible to sell except at an exceedingly low price, and in some collieries it is customary to burn coal, or rather dirt, which they cannot otherwise dispose of, and frequently there is ample boiler power available to steam any electrical plant which they may put down; therefore, the supply companies have a very difficult job before them when they try to supply current against such odds. In addition to this, there are a number of collieries where the steam can be generated or the power obtained from coke-oven gases, and therefore to compete, supply companies will have to be prepared to accept quite a moderate price for their current; but if they can supply at a price approaching what it can be produced for at the colliery, then there is little doubt that colliery owners would welcome the electric supply, and be able to utilize the capital which they would expend on their generating plant either for new machinery at the colliery or upon an increased electrical plant.

Some actual figures of costs of production at collieries may be of interest, and I give a few as under.

At a colliery in the Rhondda Valley, South Wales, where they have compound horizontal engines, with rope-driven generator, and there is altogether a total of 2,000 to 3,000 horse-power, they are producing their current (which is three-phase) at a cost of slightly over ·4 pence per unit, including all interest and depreciation.

At another colliery in Scotland, where electrical plant was put down to take the place of steam pumping, and where the plant is running eight to ten hours per day, and the installation

consists of a compound condensing engine, with rope-driven generator, they are producing current at slightly over ·4 pence per unit.

At a small colliery near Newcastle, where a horizontal single cylinder engine was installed, driving a generator of only 120 kilowatts capacity, running twenty hours per day for pumping in the day time, haulage at night, after a run of about one and a half years it has been ascertained that the cost per unit is ·45 pence.

I could give several more instances to bear out these figures, and some even lower, but one more example is an installation where it is proposed to use heat from coke-ovens, and in this instance the cost, allowing 10 per cent. for depreciation and 5 per cent. interest on the capital expended on the generating plant, shows that the cost does not exceed ·3 pence per unit.

As regards the cost of supplying current to engineering works—of course works of this description are hardly in the position to produce their own current as economically as a colliery, but, even under these circumstances, I can point to several installations of quite moderate size where the total cost, including interest and depreciation, has varied from ·6 pence to not more than ·9 pence per unit, except under very exceptional circumstances.

In considering the cost of electricity per unit, consumers should be careful to see that when they are charged for three-phase current, that they are paying on the true watts and not upon the apparent watts.

Consumers should, therefore, make a point of seeing that any measuring instruments which are used for measuring the supply of current on a three-phase system register the true watts, otherwise they are liable to pay from 10 to 20 per cent. more for current than they actually consume.

These remarks are not intended to in any way discourage the use of three-phase currents, but merely to show consumers what they must allow for when they are working on the three-phase system.

I fully agree with all that Mr. Snell has said with regard to the simplicity of three-phase machinery, and I feel confident that the demand for this class of machinery will increase very greatly in the future; but, unfortunately, three-phase motors cannot be economically regulated for speed, and they have not the same starting power that continuous-current motors have. In all other respects, however, they are extremely reliable and satisfactory, and three-phase current has the advantage that it can be generated at a low voltage and transformed and conveyed for long distances with great economy. They are, therefore, very suitable for colliery work where the collieries are situated at distances apart and it is desired to generate from one central station.

Yours faithfully,
W. C. MOUNTAIN.

Mr. JOHN H. BARKER said—The author of the paper says on page 156 that a belt-driven dynamo must account for probably at least 5 per cent. loss of power. It is to be regretted that authority is not given for a statement which is contrary to the experiences of many engineers. Figures have been shown me to-day, taken from a compound engine driving a dynamo by ropes (the author presumably includes ropes as belts), where the combined efficiency, *i.e.*, indicated H.P. to electrical H.P., delivered is as high as 85 per cent., an absolutely impossible figure to be attained if 5 per cent. be deducted for transmission of power from engine to dynamo. Possibly where two shafts are connected by belt, and no adjustment is allowed between the shafts, such a loss might occur, but all dynamos have an arrangement whereby the tension of the belt may be controlled with the greatest nicety.

consists of a compound [illegible] the cost
generator, they are pr[illegible]ted that the cost
per unit. [illegible] plant, yet seve[illegible]

At a small co[illegible] installed for a less su[illegible]
single cylinder [illegible] buildings, etc., notabl[illegible]
only 120 kilowa[illegible] K.W. have been installed at [illegible]
pumping in th[illegible] K.W., including all charges for [illegible]
one and a h[illegible] buildings and machinery alone [illegible]
unit is ·45 [illegible] estry, 173 K.W., in five units.

I coul[illegible] items.
and son[illegible] new plant of 10,000 K.W. could
where [illegible] K.W., but as yet there is no station of
instal[illegible] the books at so low a figure, and
5 pe[illegible] ned when buying power with what is.
pla[illegible] cost of Newcastle-upon-Tyne Company,
[illegible] K.W. installed, is £30 per K.W.

Mr. FRANK [illegible] said—This Institution is fortunate in having amongst its members an authority like Mr. Snell on electrical matters. He has read a paper and has put, in a very practical way, the comparative economy between installations laid down at the works themselves and the purchase of electricity from an outside power station.

There is no doubt that electricity is the proper power to adopt for industrial purposes. The point I am most interested in is the laying down of complete motor installations and the grouping of motors in the most economical way.

periods some of each machine can be driven off one section of the shaft, the remainder of the shaft being uncoupled for economy of power. This point is, of course, to be secondary to shop economy, but may well be attended to if other economies permit of it.

Each shaft must have its own motor; heavy machines should not be grouped with light machines, especially when the heavy machines are of the reciprocating order, such as heavy planers, which demand a heavy current at each point of stroke reversal.

It is proper for heavy machines to have their own motors, while it is also equally proper that a large number of small machines should have one motor only.

With separate motors to each machine, each motor must have a power in excess of the maximum effect of the machine it drives.

Where enormous economies have been effected by means of electrical driving, the cause must be sought in the widely scattered nature of the works, the comparative fewness of machines, and the great length of shafting or of more wasteful steam-piping, and in the badness of the bearings of the shafting, and of the attention, as well as in the low quality, of the many small engines employed.

Mr. Hugo MacColl said—I think the Institution is much indebted to Mr. Snell for bringing this important subject before us. I wish to take exception somewhat strongly to a few of his opinions and figures, and this I do without prejudice to my great appreciation of the excellent and successful work Mr. Snell has accomplished in Sunderland in generating, distributing and applying electric energy.

To some extent, Mr. Snell has assumed that electricity is the most economical agent for the distribution of power in engineering works, an error into which others have fallen only to get a rude awakening when they received their first quarter's invoice for electric current. One such case, as described to me, was almost dramatic. The user called up the generating station to see if some mistake had not been made, and on being told the charge was correct, he at once sent for his foreman and told him to cut off the current and light his boiler fires.

The "diversity factor" applies to engineering works as well

Continuing the remarks of Mr. Mountain on the cost per K.W. for small installations, it will be admitted that the cost of a public station would be more than a private plant, yet several stations of the former class have been installed for a less sum than £45 per K.W., for engines, boilers, buildings, etc., notably Ross, in Herefordshire, where 80 K.W. have been installed at a total cost of £4,000, or £50 per K.W., including all charges for mains, cost of order, etc., and for buildings and machinery alone not more than £30, whilst Oswestry, 173 K.W., in five units, cost £34 per K.W. for the same items.

It may be granted that a new plant of 10,000 K.W. could be installed for £20 per K.W., but as yet there is no station of this size which stands in the books at so low a figure, and manufacturers are concerned when buying power with what is, not what might be. The cost of Newcastle-upon-Tyne Company, which has about 17,000 K.W. installed, is £30 per K.W.

Mr. Frank Little said—This Institution is fortunate in having amongst its members an authority like Mr. Snell on electrical matters. He has read a paper and has put, in a very practical way, the comparative economy between installations laid down at the works themselves and the purchase of electricity from an outside power station.

There is no doubt that electricity is the proper power to adopt for industrial purposes. The point I am most interested in is the laying down of complete motor installations and the grouping of motors in the most economical way.

periods some of each machine can be driven off one section of the shaft, the remainder of the shaft being uncoupled for economy of power. This point is, of course, to be secondary to shop economy, but may well be attended to if other economies permit of it.

Each shaft must have its own motor; heavy machines should not be grouped with light machines, especially when the heavy machines are of the reciprocating order, such as heavy planers, which demand a heavy current at each point of stroke reversal.

It is proper for heavy machines to have their own motors, while it is also equally proper that a large number of small machines should have one motor only.

With separate motors to each machine, each motor must have a power in excess of the maximum effect of the machine it drives.

Where enormous economies have been effected by means of electrical driving, the cause must be sought in the widely scattered nature of the works, the comparative fewness of machines, and the great length of shafting or of more wasteful steam-piping, and in the badness of the bearings of the shafting, and of the attention, as well as in the low quality, of the many small engines employed.

Mr. Hugo MacColl said—I think the Institution is much indebted to Mr. Snell for bringing this important subject before us. I wish to take exception somewhat strongly to a few of his opinions and figures, and this I do without prejudice to my great appreciation of the excellent and successful work Mr. Snell has accomplished in Sunderland in generating, distributing and applying electric energy.

To some extent, Mr. Snell has assumed that electricity is the most economical agent for the distribution of power in engineering works, an error into which others have fallen only to get a rude awakening when they received their first quarter's invoice for electric current. One such case, as described to me, was almost dramatic. The user called up the generating station to see if some mistake had not been made, and on being told the charge was correct, he at once sent for his foreman and told him to cut off the current and light his boiler fires.

The "diversity factor" applies to engineering works as well

Mr. Little also refers to that important subject, the steering of cars, and the illustration R gives the general principle of the Ackerman system. As Mr. Little points out, the knuckles A F and B E (illustration R, page 139) generally converge about the centre of the rear axle. Wherever they converge, however, the wheels are absolutely true for two positions only—when running straight and in one other particular position which is dependant upon the point of convergence of the arms A F and B E. Mr. C. H. Gale, A.M.I.C.E., has scientifically analysed this problem in an article which appeared in the *Automotor Journal* of April 23rd of last year, and in which he makes the interesting statement that "for all cars the correct converging point for the arms of the bell cranks should be between three-fifths of the wheel-base forward of the rear axle for short cars, and midway between the front and rear axle in the case of long cars." With regard to the actual steering gear itself, the worm and quadrant is, as Mr. Little remarks, one of the most popular types. When worn, however, it is liable to jamb at "full lock," and to counteract this the Wilson Pilcher cars—now made by Sir W. G. Armstrong, Whitworth & Co.—are fitted with a very carefully thought-out adjustment. Referring to illustration S (page 140), it is important, for obvious reasons, that it should be impossible for the rod F to fall off should the buffer springs, which hold the blocks G and H in place, become broken.

I have touched upon but a few of the many points in Mr. Little's paper, and I very much regret being unable to be present at the meeting on Friday night to listen to the remarks

RESUMED DISCUSSION ON MR. J. F. C. SNELL'S PAPER ON "THE APPLICATION OF ELECTRICITY TO INDUSTRIAL PURPOSES."

The SECRETARY said—I have a telegram from Mr. Snell to say he is exceedingly sorry he cannot be with us to-night, because he is detained at a Parliamentary Committee meeting in London.

Communication from Mr. W. C. Mountain:—

17th March, 1905.

DEAR MR. DUCKITT,

I was unfortunate in not hearing Mr. Snell's paper read, but I have read the paper myself with considerable interest, and Mr. Snell, to my mind, appears to touch upon a most important subject, namely, the economical distribution of electricity to works and manufactories of all kinds, and I think the Institution is to be congratulated upon having such a very practical paper placed before them by a gentleman so thoroughly competent to deal with the subject.

There is no doubt that electric supply companies will play a most important part in the near future, and the fact that manufacturers are able to get a supply of current for their works or colliery owners for their collieries at a reasonable price will very gradually add to the work of the manufacturer of electrical machinery and at the same time effect important savings to the consumers of electrical energy, and I therefore hope that in my remarks I shall not be considered hostile in any way to electric supply companies, but I am sorry that I cannot accept some of Mr. Snell's figures as, in my opinion, quite correct.

Mr. Snell, in the early part of his paper, touches upon one point, namely, the standardization of electrical machinery, and this, of course, refers particularly to three-phase machinery. The Engineering Standard Committee have, I understand, recommended a periodicity of 50 and 25 cycles for three-phase motors

as to power stations, and it is generally found that if provision made for 50 to 60 per cent. of the aggregate of the maximur powers required for each machine no inconvenience i experienced.

I think too much is often claimed for the saving that i made by doing away with line shafting. I recently had ar engine indicated driving 500 feet of shafting, as well as counter-shafts and belting for about 40 machines of varied class, and found the I.H.P. developed to be 17. I had at this time under consideration the driving of a workshop requiring 100 brake horsepower. I found the cost of electric current, as supplied by the local power station, to be about 1d. per brake horsepower, or about 8s. 4d. per hour. With a good gas-engine and gas at 1s. 6d. per 1,000 cubic feet, this cost comes out at 2s. 3d. per hour. I therefore do not quite see how this difference is going to be made up and a saving shewn in favour of electric driving.

Coming to the figures Mr. Snell has put before us, I would only say that if these figures are accurate, Mr. Snell is to be congratulated on having found two shipyards capable of supplying data so suitable for his purpose. Referring to that driven by steam, I find that if we take the efficiency of the generator at 90 per cent. and the mechanical efficiency of the engine also at 90 per cent., the consumption of coal works out as equal to about 4·42 per I.H.P. per hour; while we know that an efficient triple expansion marine engine, working at 160 lbs. pressure, consumes about one-third of that amount. No doubt the scarcity of water and other local conditions account for a

one gallon per day, which for 100 days, at 2s. per gallon, would come to £10 for the period of the trial against £24 which Mr. Snell has allowed.

Taking into consideration the remarks of the previous speaker, it seems to me if you go through Mr. Snell's figures and divide by 3 you get a result as nearly accurate as the original figures.

I regret Mr. Snell has not given us any figures shewing the cost of generating electricity in power stations, but this I do know, that the Sunderland Corporation charge their small consumers 2½d. per unit and their largest consumers 1¾d., and I believe they have proved to the satisfaction of the Tramways Committee (the consumers referred to) that this is a reasonable charge based on costs. By some ingenious arrangement, analogous to dumping, they are selling current to certain favoured individuals at about 1 1/16d. to 1⅛d., but I do not know how long the simple-minded ratepayers will stand this.

Mr. Snell has not shewn us how the economy in favour of power stations is going to be realized. He has mentioned that shipyards and other factories have to pay rates and taxes, but power stations are not exempt from these privileges. He does, of course, dwell on the "diversity factor," but against that we have not only the great expense of administration, but all the expense of laying and keeping in repair the distributing cables. So that I think Mr. Snell has completely failed to make out his case that power stations can supply electricity cheaper than larger consumers can generate it for themselves; and I think it is quite clear that they are only now paying their way by that system I have already referred to, of robbing Peter to pay Paul, by making the small consumers and electric light users pay for what they are losing on the current supplied to large factories

Mr. G. Vardy said—I must thank Mr. Snell for this valuable paper, and I am glad it has been given, as it will tend to clear up the differences between private stations and public supply. It is quite conceivable, as has been previously mentioned, that a consumer of a supply company may get a fright on seeing his first bill, but the chances are he would get a greater fright if he knew his actual running costs previous to taking the supply.

The figures Mr. Snell gives for private stations require a certain amount of correction. The coal bill given for the steam plant is certainly exorbitant, but the 5 per cent. he allows for depreciation is not at all sufficient for an electrical station. I know of one station that has only been built four or five years, and it is now practically out of date; and under such conditions I think an electrical generating station should not allow less than 8 per cent. for depreciation. This would allow for the plant being out of date in, say, ten years. The load factor of 22 per cent. for the combined shipyard and engine works is reasonable and is about the usual value. Of course, in public power stations it is much higher than that—probably over 40 per cent.—and it is due to this fact that they get the saving in the cost of generation.

In the case of the gas-engine, I have the same fault to find with the interest and depreciation, which is ridiculously small. The gas consumed is certainly large, but this may probably be accounted for by the low heat value of the gas used, but if everything was allowed for, I think the cost would be at least 1¼d. per unit. To put the gas-engine plant on a basis equivalent to the steam plant a similar load factor should be assumed, and correction made accordingly, but still the cost would at least run out at 1⅛d. The repairs to the gas-engine plant seem rather light. My experience of gas-engines may, perhaps, be unfortunate, but they certainly take a certain amount of keeping up, while the starting troubles (against a slight load) are most annoying. Sometimes they will start and sometimes they will not, and it is very difficult to find out what

current that Mr. Snell mentions here for supply from an outside source seems rather high, especially for customers with a load factor of over 50 per cent., because it is these good customers that the supply companies like. I am sure they can supply at less than the figures mentioned here if the load factor is anything up to 50 per cent.

Referring now to the nature of the current used, the great advantage of direct current is the speed variation of the motors. That is really the only advantage claimed, and certainly in many cases it is most important, particularly in engine works where you may want to run an individual machine at varying speeds. The motor giving the best range of speeds in the simplest manner is, I think, the Johnson-Lundell. One small motor of this make I have just tried, and I find the speed variation is about 50 per cent. above and below the mean, while at all speeds the motor runs beautifully. At the same time, speed variation can also be got mechanically instead of electrically. The direct-current motor does not, therefore, have matters exactly all its own way in regard to speed variation, but probably the electrical arrangement is slightly more economical. Referring now to the three-phase current, the advantage, as Mr. Snell mentions, is the cheaper first cost and the simplicity of starting apparatus. One motion of a handle puts into action motors up to 10 or 15 horsepower, and an unskilled man in any works is capable of performing this operation. In the works with which I am connected, if a motor is required for overtime the shipyard workmen do not need to make elaborate preparations for power. They simply start for themselves the machines required and stop them again when they finish. The cheapness of running a three-phase plant, too, is rather marked, I think, in many instances. I know a case of 1,000 horsepower in motors, with about 100 arc lamps, where the plant is kept running and the arc lamps trimmed by one labourer and a boy. I think that in itself speaks volumes for the efficiency of the three-phase plant so far as running and upkeep is concerned. Of course, for crane work, direct-current series wound motors have a certain advantage; and the increase of speed in starting the load is probably of consequence where very rapid handling of material is required.

Mr. Snell speaks about experts being employed as consulting men. This is very important, but what I do recommend is

that the experts be not purely electrical men. Purely electrical experts are rather to be avoided than otherwise. Get hold of men who are good mechanical engineers as well as electrical engineers, and then you will no doubt get complete satisfaction. The electrical man looks at everything from the electrical point of view, and does not give sufficient attention to mechanical details.

With reference to the running of the cables, I do not know whether Mr. Snell deliberately intends that the cable should be run the whole length in iron piping, but where they cannot be damaged or handled it is, in my opinion, better if they are run open on insulation and so are able to be seen: but, of course, where they are liable to mechanical injury they should be protected in pipes, the pipes, of course, being arranged so as to be self-draining, and everything that is liable to be touched should be well earthed.

On the question of standardization, Mr. Snell, as a member of the Standardization Committee, may have somewhat extreme views thereon, but it seems going a big step in the direction of standardization when he recommends only three sizes of motors in one works. I know one case where the same make of motors has been bought for a period of four years, and during that time three distinct types have been supplied, each individually different from the other two. How one could possibly carry out standardization under these circumstances I do not know. Mr. Snell is quite right as regards lamps and brushes. Something could be done, and should be done to keep these as uniform as

NORTH-EAST COAST INSTITUTION OF ENGINEERS AND SHIPBUILDERS.

TWENTY-FIRST SESSION, 1904-1905.

PROCEEDINGS.

EIGHTH GENERAL MEETING OF THE SESSION, HELD IN THE LECTURE THEATRE OF THE LITERARY AND PHILOSOPHICAL SOCIETY, WESTGATE ROAD, NEWCASTLE-UPON-TYNE, ON FRIDAY EVENING, APRIL 14TH, 1905.

SIR THOMAS RICHARDSON, B.A., J.P., PAST-PRESIDENT, IN THE CHAIR.

The PAST PRESIDENT (Sir Thomas Richardson) said—In the unavoidable absence of Lord Armstrong, our President, the duty devolves upon me of taking the chair this evening, and I can assure you it is a duty which I accept with very great pleasure.

The SECRETARY read the minutes of the previous meeting, held in Newcastle-upon-Tyne, on Friday, March 17th, 1905, which were confirmed by the members present and signed by the Chairman.

The CHAIRMAN appointed Mr. James Marr and Professor R. L. Weighton to examine the voting papers for new members, and the following gentlemen were declared elected:—

MEMBERS.

Denton, Geoffrey Price, Ship Draughtsman, 63, Osborne Road, Newcastle-upon-Tyne.

Robson, James Bertram Lock, Marine Engineer, 9, North Terrace, Newcastle-upon-Tyne.

GRADUATES TO MEMBERS.

Fortune, Tom Cameron, E. Draughtsman, 76, Falmouth Road, Heaton, Newcastle-upon-Tyne.

Tulip, Wilfred, E. Draughtsman, Messrs. Hong Kong Whampou Dock Co., Hong Kong, China.

GRADUATE.

Porter, Norman, Apprentice Electrical Engineer, 77, Goldspink Lane, Newcastle-upon-Tyne.

RETIRING OFFICERS.

The CHAIRMAN said—In accordance with Article X. of the Constitution, the following gentlemen will retire from the Council:—

President—Right Hon. Lord Armstrong (eligible for re-election).

Vice-Presidents—Messrs. W. H. Dugdale, Summers Hunter and James Marr (eligible for re-election).

Hon. Treasurer—Mr. G. E. Macarthy (eligible for re-election).

Ordinary Members of Council—Messrs. J. M. Allan, G.

Hon. Treasurer—Mr. G. E. Macarthy.

Ordinary Members of Council—Messrs. George J. Carter, H. Raylton Dixon, David R. Macdonald, Robert Roger, Robert Wallis and George D. Weir (five to be elected).

Any member can add to the above nominations at this meeting.

Mr. N. E. Robson and Mr. Alfred Harrison were nominated as ordinary members of Council.

PROPOSED ALTERATION OF BYE-LAW 11.

The CHAIRMAN said—On behalf of the President and the Council, I give notice that, at the Closing Business Meeting of the Session, to be held in Newcastle-upon-Tyne, on Friday, May 19th, 1905, the President will move that the following sentence in Bye-law 11 shall read as under (the alteration is printed in italics):—

> 11.—The Annual Election of Officers shall be conducted in the following manner:—The Council shall meet in March or April, and shall arrange a list of nominations, in accordance with the Form H in the Appendix. It shall nominate new names in the place of the retiring Members, and the number of nominations shall be *two* in excess of the number required in each section of the Council.

Mr. D. B. MORISON read a paper on "Boiler Furnaces and the Effect of Oil in their Ultimate Strength."

BOILER FURNACES AND THE EFFECT OF OIL ON THEIR ULTIMATE STRENGTH.

By D. B. MORISON, M.I.N.A., Vice-President.

[Read in Newcastle-upon-Tyne, on April 14th, 1905.]

In 1892 I read a paper on Boiler Furnaces before the members of this Institution; I now have pleasure in communicating the results of subsequent investigation and experience. The furnace is an important factor of boiler efficiency—about 60 per cent. of the total steam being generated from its surface—and its collapse is almost invariably attended by so serious a wastage of capital that the principles and practical conditions affecting its correct design, and the maintenance of the highest attainable strength and efficiency in actual work, are well worthy of the serious consideration of those responsible for its performance.

The Board of Trade, Lloyd's Registry, and other registration societies, assign strength values to various types of furnaces by subjecting them to external hydraulic pressure, until collapse takes place.

The furnace to be tested is rivetted into a strong steel cylinder (Plate LIX.), the space between the outer surface of the furnace and the inner surface of the cylinder being filled with cold water, the pressure of which is raised until the furnace collapses, and from this result a coefficient of resistance to collapse is obtained by the following formula:—

$$\frac{P \times D}{T} = \text{collapsing coefficient.}$$

P = collapsing pressure in lbs. per square inch.
D = outside diameter of furnace in inches.
T = thickness in inches.

These collapsing coefficients are accepted by boiler manufacturers, shipowners and others as correctly indicating the comparative strength values of the various types of furnaces and are used by designers in calculating thickness.

Some confusion arises from the manner in which the various surveys treat the diameter D in this formula. As the least inside diameter of a furnace is the true measure of its grate area, it would seem that the least external diameter could reasonably be adopted for purposes of calculation for all types of furnaces. This view is taken by the Board of Trade and the British Corporation, but Lloyd's and Bureau Veritas adopt the least external diameter for ribbed and the greatest external for corrugated furnaces. The advantage in adopting one basis would be simplicity of method as tending to facilitate calculations and minimize the chances of error, whilst such a course would also be in harmony with the objects of the Engineering Standards Committee.

An important factor which does not appear in this calculation is the strength of the material. The range of tensile strength allowed by the Board of Trade, Lloyd's, and Bureau Veritas is from 26 to 30 tons per square inch, but the British Corporation require 25 to 29 tons. In calculating the comparative resistance to collapse from cold water destructive tests, one definite mean value of the tensile strength should be taken, as a most unreliable comparison would result if one type of furnace made of 26 tons steel were compared with another type of 30 tons and a coefficient assigned to each without any adjustment for

assigned, would seem to justify my contention. The tests carried out by the Board of Trade, Lloyd's Registry, and other registration societies only determine the resistance to collapse of a clean cold tube when subjected to the pressure of cold water. Experience has proved this to be an entirely untrustworthy measure of the strength of the same tube when used in a boiler under actual working conditions, and such tests cannot correctly determine the relative strength values in actual work of different designs.

I at once grant that this method of testing is necessary and instructive, but to assign to a tube a strength value derived from a test under conditions bearing no resemblance to those to which it will be subjected when in use as a boiler furnace, may be dangerously misleading to those who are accustomed to accept the regulations of the controlling bodies without investigation.

The strength value of a furnace can be estimated only by its behaviour when in use in a boiler under severe conditions of work. If the wall of a furnace were always clean and a good conductor of heat, so that the temperature of the metal never largely exceeded the temperature of the boiler steam, then the furnace would never deform, because, in that condition it would be capable of withstanding (according to Board of Trade regulations) about five times the load which could ever be imposed upon it by the steam pressure. Therefore, a furnace deforms or collapses only when a portion of its wall becomes so overheated as to reduce the strength of the metal by an amount which renders it incapable of resisting the pressure to which it is subjected, and it follows that the safety of a furnace does not depend so much upon the strength theoretically derivable from any particular form of tube, as upon the ability of that form to minimize the possibility of local overheating and to safely withstand the weakening effect of overheating, should it by any chance occur.

It is consequently possible for a tube to be of great strength when subjected to cold water external pressure, and yet be practically a failure as a furnace in a boiler.

The various types of cylindrical furnaces may be divided into the following classes:—

(1) Plain cylindrical tubes, straight in longitudinal section throughout their length.

(2) Plain cylindrical tubes, strengthened by flanges, hoops, corrugations, or ribs, at intervals throughout their length.

(3) Furnaces wholly curvilinear throughout their length.

Corrugated furnaces of all types enable large diameters to be employed, and diameter of furnace has a direct influence on the efficiency of a boiler. At present, the strength coefficient granted by the Board of Trade, etc., is constant for all diameters, but the tendency to deform, occasionally shown by furnaces of large diameter, especially under forced draught, seems to indicate that a more uniform margin of safety would be secured if the rules of the registration societies provided a coefficient remaining constant up to, say, 3 feet 6 inches internal diameter, and decreasing proportionally as the diameter of the furnace increases.

With a given weight of material, the maximum resistance to collapse under uniformly distributed external pressure is offered by a mathematically true cylinder, by reason of the fact that the stress throughout the material is of the same character, viz., compressive. In actual practice, it is however, impossible to produce a mathematically true cylinder, and, if it were possible to produce, it would be impossible to maintain under working conditions. The effect of any departure from the true form is to vary the nature of the stress at different points, and to distribute the stresses unequally throughout the structure.

For the purpose of analysis, it may be assumed that the general effect of initial deformation is to produce circumferential

It is evident from the above consideration that it is requisite to strengthen the imperfect cylinder of practice against bending stresses. This cannot be done by thickening the metal beyond a fixed narrow limit, and a remedy has to be provided by so disposing the material as to offer to the aforesaid bending stresses the maximum resistance per unit of weight. The earlier methods adopted were to provide at intervals annular rings, such as Bowling hoops, etc. (Plate LX., Figs. 1 and 2), possessing a very much greater resistance to collapse than the plain portions of the cylinder, and in order to comprehend the later developments it is necessary to understand the principles underlying this source of strength.

The stresses in a furnace are, under normal conditions, distributed in varying manner and degree by virtue of the resistance offered by the metal to deformation, and therefore the various portions mutually reinforce one another.

Deformation involves definite mechanical movement, and this of course cannot take place at any point without either fracturing, extending, or compressing the metal in the immediate vicinity, and it is the resistance of the adjacent material to this fracture, extension, or compression that reinforces the material at the point where the localized stress has become most severe. If a cylinder be provided with stiffening rings, it is evident that these rings will not be deformed under a stress which is quite sufficient to collapse the intervening metal, so that they constitute fixed points of support, between which deformation of the cylindrical form can only take place by the extension of the metal. No deformation can take place between the stiffening rings which does not impose a bending stress upon some portion of the intervening metal, and the shorter the distance between these points of support, the stronger will be the longitudinal section, considered as a beam.

In illustration of the above remarks; let us consider the case of a plain furnace of imperfect cylindricity, with outward rings at intervals and with local accumulation of scale between the rings (Plate LXI., Figs. 1 and 2). The metal below the deposit ultimately becomes so overheated and weakened that it cannot resist the steam pressure. If this affected area of plate be isolated in one's mind for the purpose of analysis, it resolves itself into a flat strip supported at the ends by strong girder

rings and less effectively supported at the sides by the contiguous and less heated portions of the furnace wall. We have therefore, a beam, flat in longitudinal section, slightly curved in cross section, supported mainly at the ends and partially supported at the sides. The central portion of the beam, becoming weakened and plastic, deforms inwardly by bending, and it is this characteristic weakness of form that determines the ultimate strength of all furnaces which are plain or straight in longitudinal section in any portion of their length.

Excluding external separate supports, such a furnace can be strengthened only by increasing its thickness or decreasing the distance between the strengthening rings.

Mr. Purves was the first to make the strengthening rings integral with the cylindrical tube (Plate LX., Fig. 3), thereby eliminating riveted joints, making it practicable to greatly reduce the distance between the ridges, and increasing the strength of the furnace in a marked degree.

To increase the strength of the ridges, he made the metal therein thicker than the rest of the tube, but the unequal distribution of material caused unequal distribution of the stresses, which, combined with local concentration at the base of the ribs of the movement due to expansion and contraction, gave rise to circumferential fractures, and led to many subsequent modifications.

The Fox furnace (Plate LX., Fig. 4) differed essentially from all its predecessors in that it was entirely curvilinear in longitudinal section, and the more favourable conditions thereby

veakening of the metal by overheating. Another practical lefect was the loss of evaporative efficiency, caused by the heltering of the outward by the inward corrugations, and by the partial stagnation of gas in the former. The late Mr. Fox fully appreciated those defects; he also realized that he could not, by his design, obtain wider valleys without wider ridges, and, as a consequence, the pitch of the ridges would be increased and the strength of the structure lessened. The restriction of Mr. Fox's conception to similar ridges and valleys unfortunately limited the utility of his invention, and, for a time, retarded the perfectly natural development along the lines of differential curvatures of ridges and valleys. It is, however, an indisputable fact that the introduction of the Fox furnace gave a great impetus to the advance of marine engineering.

The introduction of the "suspension" design marked the next step in furnace construction (Plate LX., Fig. 5). It differed from the Purves type in being entirely curvilinear and of uniform thickness throughout its length, and, compared with the Fox, the ridges were narrower and stronger whilst the valleys were wider. Under cold water tests it is of greater strength than either, and, when in use in a boiler, it has proved its ability to withstand an increasing accumulation of deposit, for a longer period of time, before the metal becomes so weakened by overheating as to be incapable of resisting the steam pressure.

Considerable differences of opinion have arisen as to the correctness of the term "suspension" as applied to this design, but without a true appreciation of the technical principles underying furnace construction, and of the behaviour of a furnace in boiler, any corrugated furnace design appears a mere mosaic, or haphazard combination of curved ridge and curved valley.

If the formation were a tube of perfect cylindricity, uspension would be impossible, as the metal would then be ubjected to compression only, but a furnace in a boiler should ot be viewed academically but practically. A furnace collapses nly when there is a sufficient amount of deposit on the water ide to cause the metal to become practically red-hot. The rst part of the wall in a suspension furnace to become overheated would undoubtedly be the valley, as the ridge is sheltered from he heat, and, being approximately in the form of a catenary ongitudinally, this plastic metal, on being unduly stressed,

receives immediate and direct support from the ridges by the transmission throughout the entire valley to the ridges, of a practically simple tensile stress. The metal is, therefore, uniformly in a state of tension between the points of support—a condition which can only be designated as "suspension."

In a furnace of plain cylindrical form between the ridges, but otherwise similar to that just described, an equal resistance to deformation cannot be obtained unless the length of the straight portion be so limited, that the resistance to bending of any narrow cylindrical segment (considered as a partially flat beam) is not less than the tensile strength of the corresponding portions of the sides of the supporting ridges. When it is remembered that the metal in the ridges, in addition to being more favourably disposed, is also at a lower temperature and therefore stronger than that in the valleys, it will be apparent that the permissible flat is so short as to be a flat only in an academic sense. The strength controlling elements of the structure are the ridges, and until they yield, the furnace cannot collapse. Pocketing may take place owing to local overheating, but by making the furnace entirely curvilinear in longitudinal profile and correctly proportioning the curvatures of the ridges and valleys, the former can be caused to impart to the latter a greatly increased resistance to such deformation, and the strength of the furnace, as a whole, may be considerably increased.

It follows that the essence of successful furnace design lies in the correct adjustment of the dimensions and curva-

A construction embodying such a combination results, if the valleys are of such a radius that the ultimate intersection of their arcs is below the apex of the ridge, the ridge being, as it were, an independent element or girder, from which the valleys are suspended and into which their sides are merged. The metal forming the sides of the ridges is therefore disposed in planes practically normal to the axis of the furnace, with easy curves at all points where the metal undergoes a change of direction. This apparently simple modification was the result of very exhaustive tests extending over a long period, and although the change of form would seem on casual inspection to be unimportant, the resulting disposition of the metal is so effective that, when tested by hydraulic pressure, its resistance at the point of collapse is within 10 per cent. of the elastic limit. (Plate LXII., Fig. 2). When in use in a boiler, its superior resistance to deformation will be even more marked, because not only is the strength of the outward corrugations or circumferential girders greatly increased, but the intervening metal is so curved as to retain, practically unimpaired, the stress distributing and simplifying effects of the suspension principle, whereby the strength of the ridges is effectively utilized to reinforce the resistance of the inward corrugations to local deformation by overheating (Plate LXIII.).

From my experience of boiler furnaces, I am of opinion that the longitudinal section should be entirely curvilinear, of practically uniform thickness, with very strong narrow ridges, and long, curved valleys. Such a disposition gives great resistance to collapse, wide distribution of stresses, uniform longitudinal elasticity, high evaporative efficiency, and an even distribution of deposit in the valleys.

It is needless to emphasize the fact that only high-grade steel of medium tensile strength should be used for boiler furnaces, and the report (Table, page 264) of the steel used for the suspension furnaces of the P. & O. steamer "Dongola" may be taken as illustrating good standard practice.

It is equally important that the processes of manufacture should be such as to preserve the physical properties of the steel and maintain a uniform thickness of metal throughout the corrugated section. A difficulty has always been experienced in the manufacture of furnaces from a plate of uniform thickness,

by the stretching and consequent thinning of the metal at the crowns and sides of the ridges, but by a very ingenious mill, designed by Mr. Ernest Gearing, of Leeds, it is now possible to roll a furnace of deep section with the sides of the ridges practically normal to the axis and to obtain a thickness of ridge equal throughout to the original thickness of the plate (Plate LXIV.).

TABLE I.—REPORT ON SIEMENS MILD STEEL AS USED BY THE LEEDS FORGE COMPANY, LIMITED, IN THE MANUFACTURE OF SUSPENSION FURNACES FOR THE P. & O. S.S "DONGOLA."

Specimen.	Dimensions of Specimen in Inches.			Tensile Strain. Tons.		Elongation. Per Cent. in		Contraction.		Bend Test.	
	Breadth.	Thickness.	Area.	Total.	Per Square Inch.	8 Inches.	10 Inches.	Breadth.	Thickness.	Temper.	Cold.
Q 906	1·75	·78	1·365	35·5	26·0	35	32	1·24	·48	Good.	Good.
907	,,	·75	1·313	35·38	26·9	28·5	26	1·31	·48	,,	,,
908	,,	·78	1·365	35·76	26·1	33	30	1·3	·51	,,	,,
909	,,	·78	1·365	36·12	26·4	31	28·5	1·28	·51	,,	,,
910	,,	·76	1·33	35·28	26·5	32·5	30	1·25	·49	,,	,,
911	,,	·73	1·278	34·00	26·6	27·5	25·5	1·3	·46	,,	,,
912	1·74	·75	1·305	34·41	26·3	30·5	27·5	1 28	·51	,,	,,
913	1·79	·75	1·343	35·94	26·7	29	27	1·34	·5	,,	,,
914	1·76	·8	1·408	37·07	26·3	31	28·5	1·3	·53	,,	,,
915	1·75	·74	1·295	34·07	26·3	29	26	1·26	·46	,,	,,
916	,,	·77	1·348	35·33	26·2	30·5	27·5	1·29	·48	,,	,,
917	1·76	·76	1·338	36·21	27·0	29·5	27	1·34	·58	,,	,,
918	,,	·75	1·32	35·0	26·5	29	26	1·31	·5	,,	,,
919	1·79	·76	1·36	35·37	26·0	32	30	1·23	·46	,,	,,
920	1·75	·79	1·383	36·83	26·6	33	30·5	1·26	·5	,,	,,
921	1·74	·78	1·357	35·52	26·1	30·5	27·5	1·31	·53	,,	,,
922	,,	·74	1·302	35·2	27·0	34	31	1·25	·48	,,	,,
923	,,	·73	1·285	34·76	27·0	28·5	26	1·31	·48	,,	,,
924	[illegible]	·73	1·285	33·54	26·1	30·5	27·5	1·25	·45	[illegible]	[illegible]

A furnace is often very severely strained, and is liable to slight deformation, if the tubes are too close to the crown, or if the furnace is otherwise too rigidly stayed. A furnace is subjected to very great variations of temperature, and is consequently always tending to lengthen or shorten, so that, if by faulty design it is not allowed breathing facilities, it will either leak at the landings or alter its shape. Furnace fire-bars, should not be fitted in tightly when cold, for obvious reasons. Assuming that attention is given to these points, and that shortness of water does not occur, a furnace collapses only when its wall becomes heated to redness through either oily deposit or excessive scale, so that the safest furnace is the one which will longest withstand the conditions of severe usage, before the metal in any portion of its wall becomes weakened through overheating, and which, having become overheated, will retain its shape for the longest period of time before collapsing. If a furnace of any recognized type is covered with water and is reasonably clean, it will never collapse, as in that condition its resistance is five times greater than the load brought upon it by the steam pressure, but this margin commences to disappear when the temperature of the metal reaches 650° Fahr. and vanishes when the metal becomes red-hot.

It is only at these extreme temperatures that the capacity of any particular form of furnace to resist collapse becomes effective and apparent; so that the only true measure of the comparative working strength values of different furnace formations, lies in their respective resistances to collapse when at the temperature of plasticity. The temperature of steam at 200 lbs. is 380 degrees; the temperature at which steel commences to lose its tensile strength is 650° Fahr., and at 1,200 degrees about 75 per cent. of its original strength has disappeared (Plate LXVII.). If the surface of a furnace in a boiler for, say, 200 lbs. pressure, were clean, the temperature of the metal would never reach the point at which its original tensile strength would be appreciably reduced, even under very high rates of evaporation. If, however, the surface were simply rubbed over with a very thin coating of mineral oil, the temperature would at once rise to over 650 degrees, even with a moderate rate of evaporation. An appreciation of this fact will explain many a so-called mysterious collapse of furnaces, in apparently clean boilers. If

Cylinder Oil.

Sp. Gr. at 60 degrees Fahr., ·897.

Vaporizing point, being exact temperature at which vapour first becomes appreciable, 290 degrees Fahr.

Viscosity.—This indicates the comparative body or lubricating power of the oil at different temperatures; commercial tallow at same temperature being taken as standard of unity:—

	Oil.	Tallow.
At 120 deg. Fahr.	5·75	1
At 200 deg. Fahr.	1·66	1
At 320 deg. Fahr.	1·08	1
At 360 deg. Fahr.	·93	1

Remarks.—My examination of this sample indicates that, though of good body at ordinary temperature, it entirely loses this property when subjected to the temperature under which it is meant to be used. Under the conditions prevailing in high-pressure cylinders, this oil would be so deficient in body and in lubricity as to encourage or necessitate its largely increased consumption.

My certificate shows that at 360 degrees Fahr. this oil is only just equal to tallow at same temperature, and I may add that tallow at 360 degrees Fahr. is only equal in body to ordinary water.

Report.—My examination of the sample of cylinder oil would, in my opinion, lead me to infer that any injury found was due to the presence of such a large quantity of oil in the boiler and that this quantity may have been increased by the use of an oil deficient in lubricating power at the temperature prevailing in the cylinders, necessitating its use in large quantity to obtain the desired result.

The comparatively small percentage of ferric oxide (peroxide of iron) in these samples would show that the iron surfaces had been only very slightly affected as far as corrosion or oxidation was concerned. The presence of zinc oxide in decided quantity would indicate that zinc had been the medium used to protect the boiler against corrosion or oxidation, and that it had successfully effected its purpose.

In passenger boats, the source of danger is the auxiliary machinery and particularly the deck machinery, which is often carelessly lubricated by inexperienced men; whilst in cargo boats, the growing practice of using the main boilers for the working of cargo cannot fail to produce accidents, unless great care is exercised and the necessary precautions adopted.

In view of the fact that all marine engineers, and particularly superintendent engineers, fully understand and appreciate the dangers arising from oil in boilers, it is a mystery why a winch exhaust tank still continues to be fitted on shipboard (Plate LXVIII.). The office of this tank is to receive the exhaust steam from the winches, to separate the oily water therefrom for use as feed water in the boilers and to allow the cleansed steam to be discharged up the waste steam pipe. It would be difficult to find a parallel to this system as an example of engineering folly.

There is no justification whatever for the expenditure of capital to provide such an apparatus, and any heat there may be in the comparatively small amount of oily water trapped in the exhaust tank, is more than counterbalanced by the decreased efficiency of the heating surface in the boiler due to oily scale. The alternative is to employ an auxiliary condenser, which condenses all the steam from the winches and other small engines (Plates LXIX. and LXX.). This system is universal in passenger steamers, and is now being rapidly recognized as commercially correct for cargo boats, as it results in economy of coal, better steaming, and reduced boiler cleaning expenses. The oil used for winches is generally not of a high grade, and consequently forms an emulsion with the feed water, a condition rendering any system of mechanical filtration, without previous chemical treatment, exceedingly difficult, if not impossible. It is much safer to extract the oil from the exhaust steam from the winches and auxiliaries before it enters the winch condenser, this system being the direct antithesis of the exhaust tank system, as, instead of wasting the cleansed steam and utilizing the oily drainage as feed water, the process is reversed, to the advantage of both the boiler and the shipowner. As an exhaust steam oil separator, to be efficient, must be of large capacity, and with a view to economizing weight and space, the two processes of steam cleansing and condensing

Cylinder Oil.

Sp. Gr. at 60 degrees Fahr., ·897.

Vaporizing point, being exact temperature at which vapour first becomes appreciable, 290 degrees Fahr.

Viscosity.—This indicates the comparative body or lubricating power of the oil at different temperatures; commercial tallow at same temperature being taken as standard of unity:—

	Oil.	Tallow.
At 120 deg. Fahr.	5·75	1
At 200 deg. Fahr.	1·66	1
At 320 deg. Fahr.	1·08	1
At 360 deg. Fahr.	·93	1

Remarks.—My examination of this sample indicates that, though of good body at ordinary temperature, it entirely loses this property when subjected to the temperature under which it is meant to be used. Under the conditions prevailing in high-pressure cylinders, this oil would be so deficient in body and in lubricity as to encourage or necessitate its largely increased consumption.

My certificate shows that at 360 degrees Fahr. this oil is only just equal to tallow at same temperature, and I may add that tallow at 360 degrees Fahr. is only equal in body to ordinary water.

Report.—My examination of the sample of cylinder oil would, in my opinion, lead me to infer that any injury found was due to the presence of such a large quantity of oil in the boiler and that this quantity may have been increased by the use of an oil deficient in lubricating power at the temperature prevailing in the cylinders, necessitating its use in large quantity to obtain the desired result.

The comparatively small percentage of ferric oxide (peroxide of iron) in these samples would show that the iron surfaces had been only very slightly affected as far as corrosion or oxidation was concerned. The presence of zinc oxide in decided quantity would indicate that zinc had been the medium used to protect the boiler against corrosion or oxidation, and that it had successfully effected its purpose.

In passenger boats, the source of danger is the auxiliary machinery and particularly the deck machinery, which is often carelessly lubricated by inexperienced men; whilst in cargo boats, the growing practice of using the main boilers for the working of cargo cannot fail to produce accidents, unless great care is exercised and the necessary precautions adopted.

In view of the fact that all marine engineers, and particularly superintendent engineers, fully understand and appreciate the dangers arising from oil in boilers, it is a mystery why a winch exhaust tank still continues to be fitted on shipboard (Plate LXVIII.). The office of this tank is to receive the exhaust steam from the winches, to separate the oily water therefrom for use as feed water in the boilers and to allow the cleansed steam to be discharged up the waste steam pipe. It would be difficult to find a parallel to this system as an example of engineering folly.

There is no justification whatever for the expenditure of capital to provide such an apparatus, and any heat there may be in the comparatively small amount of oily water trapped in the exhaust tank, is more than counterbalanced by the decreased efficiency of the heating surface in the boiler due to oily scale. The alternative is to employ an auxiliary condenser, which condenses all the steam from the winches and other small engines (Plates LXIX. and LXX.). This system is universal in passenger steamers, and is now being rapidly recognized as commercially correct for cargo boats, as it results in economy of coal, better steaming, and reduced boiler cleaning expenses. The oil used for winches is generally not of a high grade, and consequently forms an emulsion with the feed water, a condition rendering any system of mechanical filtration, without previous chemical treatment, exceedingly difficult, if not impossible. It is much safer to extract the oil from the exhaust steam from the winches and auxiliaries before it enters the winch condenser, this system being the direct antithesis of the exhaust tank system, as, instead of wasting the cleansed steam and utilizing the oily drainage as feed water, the process is reversed, to the advantage of both the boiler and the shipowner. As an exhaust steam oil separator, to be efficient, must be of large capacity, and with a view to economizing weight and space, the two processes of steam cleansing and condensing

have been carried out in one combined apparatus, as illustrated in Plate LXXI. This combination also permits of an evenly distributed flow of steam into the condenser throughout its entire length, thereby materially increasing the efficiency of the cooling surface. The usual method employed is to condense at atmospheric pressure; the advantages being simplicity of mechanism, no air pump being required, a high temperature of feed water, and a high efficiency of circulating water. In the apparatus illustrated (Plate LXX.), which is a straight tube condenser, on the "Contraflo" principle, the feed water temperature is about 180° Fahr. and the circulating discharge about the same, and, as the surface efficiency and the water efficiency are both very high, a much smaller condenser and a less quantity of water are required than in ordinary practice. Considerable advantage is obtainable by utilizing such an apparatus at sea, for cleansing the steam from the steering engine and other deck auxiliaries which may be in use during the voyage, the water of condensation being drained into the hot-well and the oily drainage either filtered or wasted, depending on its quantity. This arrangement also affords facilities for ascertaining the steam consumption of steering engines, etc., and is productive of instructive and occasionally of startling results. The samples of water shown are from an apparatus in ordinary work; the contrast between the oily drainage and the clean feed water being most marked.

Another phase of this question is the quality and characteristics of the oil used for the internal lubrication of

denser also has the advantage of keeping the tubes clean and so maintaining their efficiency.

With regard to marine engines using saturated steam, my own experience is that with suitable piston rings continuous internal lubrication is unnecessary, and with metallic gland packing a minimum amount of swabbing is required for the rods.

The object of a piston ring is to maintain steam tightness with the least possible pressure between the surfaces, a condition which also requires a minimum of lubrication. A device for this purpose, which has been very successful in practice, consists of an endless steel ring which fits into a recess in the piston ring and limits its expansion to a pre-determined amount. (Plate LXXII., Figs. 2 and 3). Experience has shown that a very small allowance for expansion is necessary, and as the limit ring ensures and maintains cylindricity, steam tightness is obtained with a minimum of friction and wear; the arrangement also gives the engineer every facility for inspection and adjustment.

Upon this very important question of internal lubrication, an expression of opinion from the many superintendent engineers of high professional attainments, who are members of this Institution, would be most valuable and instructive. Whatever may be the system employed, there is no doubt whatever that the quality and suitability of the lubricating oil are of vital importance, so that the commercial instincts of a non-technical buyer of oil may very severely handicap the engineer who is responsible for the efficiency of the machinery on which it is used.

A high price may be given for an inferior cylinder oil, but a high-grade oil cannot be obtained except at a high price, by reason of the costly processes of manufacture.

Given a sufficiently high temperature, any oil will vaporize, and this evaporation will be at a maximum when the oil is in a finely divided state. For this reason the conditions prevailing in a cylinder demand an oil which will not vaporize until a temperature has been reached considerably in excess of the temperature of the steam; the excess being necessary from the fact that oil, subjected to the conditions in a cylinder, shows greater changes than the same oil does when heated to a much higher temperature in small bulk in the open air. If the oil vaporizes below the steam temperature, it cannot perform its functions as a

lubricant, and is simply swept by the steam into the condenser, where it emulsifies with the feed water.

When oil is fed into a cylinder, it should not only be unaffected by the temperature, but should distribute itself amongst the steam in such a manner as to effectively lubricate the surfaces with which it comes in contact. If, on the other hand, the oil is so sluggish as not to associate with the steam, it is either local in its action, or it is blown through the engine practically unused. Cylinder oil should, therefore, possess the greatest fluidity consistent with the conditions and requirements prevailing, and yet have sufficient viscosity to perform its lubricating functions on the parts to which it attaches itself and which, in the case of cylinders, are always more or less wet. In order to increase the lubricity of pure mineral oil, and to assist it to adhere to the cylinder surfaces, some manufacturers add a very small percentage of saponifying oils; but for very high temperatures, and especially for superheated steam, it is very questionable whether a straight high-grade oil is not the safer to adopt. Other essentials for a good cylinder oil are that it shall not carbonize or gum, and that it shall be entirely free from acid. The demands are most exacting, and can only be met by a mineral oil of the highest grade.

It is not the very high-grade mineral oils which give serious trouble in boilers, but cheap, low-grade oils, and particularly the oils used in lubricating the auxiliary engines and deck machinery. These oils, emulsifying with the feed water, cannot be filtered out, unless the water be first chemically treated; so

Boiler furnaces afford an apt illustration of the fact that progress in mechanical engineering is achieved only by a judicious combination of theory and practice, or the application of fundamental principles to the complex situations that are so often revealed by experience, and, in my opinion, the value of a paper such I have had the honour of submitting to you depends in no small degree upon the extent to which it may, during discussion, elicit the experiences of the superintendent engineers to whom marine engineering is so largely indebted for the remarkable progress already made in the directions of safety and efficiency.

DISCUSSION.

The CHAIRMAN (Sir Thomas Richardson) said—On my own behalf, and on behalf of everyone here, I would first of all congratulate Mr. Morison on the very excellent paper which he has just read to us. It must be apparent to everyone that that paper has not been put together without a very considerable amount of time and labour, and, as many of you who are in a similar position to Mr. Morison know, your work does not admit of you sparing much time from your ordinary occupation; I therefore think that the thanks of this Institution are greatly due to Mr. Morison for giving up so much of his time to preparing this very valuable and important paper. I shall not myself attempt to criticize it, or to say anything about it beyond congratulating him on its acceptance, and therefore I call upon Mr. Fothergill to make a few remarks upon it from his point of view.

Mr. J. R. FOTHERGILL (Vice-President) said—I feel I have a very difficult task to perform in opening the discussion. The paper will not admit of the usual criticism; it conforms in its essential particulars to accepted fact and I can therefore only endeavour to support the assertions made. But before proceeding to discuss the paper I wish to say I heartily agree—in fact I am sure we all agree—with the Chairman in offering to Mr. Morison our congratulations on such an excellent and valuable paper—I think, I may say, one of the best read before this Institution.

On the upper part of page 256, Mr. Morison draws attention to the different views taken by the various registration societies as to the value of D given in the formula. It seems very extraordinary that in this age of standardizing in engineering that some agreement cannot be come to between them on such a simple matter as to how the diameter of a furnace should be taken. I would suggest that they be treated as they used to treat juries—lock them up for the night until they do agree.

Now as to cold water testing, I think the most of us quite coincide with Mr. Morison's views that cold water testing does not give us a reliable indication of what material will stand; but I fail to see how we are to forego it. We must have some test, if it is only a test of workmanship, and therefore it appears inevitable that the cold water test is the only one we can resort to. I think few of you would care to stand by whilst testing a furnace to destruction under steam.

About the middle of page 260, Mr. Morison says, "To increase the strength of the ridges, Mr. Purvis made the metal therein thicker than the rest of the tube, but unequal distribution of material caused unequal distribution of the stresses, which, combined with local concentration at the base of the ribs of the movement, due to expansion and contraction, gave rise to circumferential fractures and led to many subsequent modifications." All those who are conversant with the Purvis furnace and have had much to do with it know well the difficulties experienced in circumferential cracking, which usually takes place just below the apex of the ridge, and no doubt this is

consistent with the maximum strength coefficient is the primary object in view, and to obtain this the introduction of the curve became necessary. Mr. Morison has fully described the various furnaces that have been introduced and pointed out their deficient features.

The great feature in the suspension bulb furnace is, if I understand Mr. Morison right, that you have an equal distribution of stress throughout the curve, due to its being a catenary curve, that is, the natural curve of suspension, the curve which a suspended chain takes, as Mr. Morison has so well described and shown by models before you. But having such a curve, the next question is to design the best form of support equivalent to the towers of a suspension bridge, and it is in this particular that Mr. Morison has so improved the new furnace.

The supporting ridges are circular at their apex, with vertical sides, into which the suspension curve merges by an easy curve, allowing sufficient play to meet the requirements of expansion and contraction and yet offering the greatest resistance to deformation (see Plate LXII., Fig. 2).

To show graphically the advantage of this furnace as compared with the original suspension design. If you take two furnaces, both $\frac{5}{8}$ inch thick in the plate and a boiler pressure of 200 lbs., one furnace manufactured to the original suspension design and the other to the suspension bulb design, you will, according to the Board of Trade rules, have in the first instance a furnace 3 feet $6\frac{1}{2}$ inches diameter, and in the second instance 3 feet $9\frac{1}{2}$ inches diameter. This additional 3 inches in diameter is a very great factor in the efficiency of combustion in the furnace. Perhaps I may put it another way: a furnace 3 feet $6\frac{1}{2}$ inches diameter by $\frac{5}{8}$ inch thickness of plate will obtain, by Board of Trade rules, 200 lbs. pressure under the old design, but under the new design will obtain 214 lbs. pressure. You will at once see the large increase in strength obtained by the new design. Personally, I look to the increase in diameter as of the greatest importance, owing to the higher efficiency in combustion.

It is somewhat remarkable that all inventors, in striking a new idea, usually begin at the wrong end, introduce as many wheels, cranks, etc., as would make a dozen of the ultimate developed machine, and so, metaphorically, has been

the development of the furnace. It is some twenty-eight years since Mr. Samson Fox introduced the corrugated, and fourteen years since Mr. Morison first gave his attention to the suspension furnace, so that time becomes a serious element, in the development of a new idea, to success.

Mr. Morison, at the top of page 265, says, "A furnace is subjected to very great variations of temperature and is consequently always tending to lengthen or shorten, so that, if by faulty design it is not allowed breathing facilities, it will either leak at the landings or alter its shape." Many of us, unfortunately, have experienced this, and in many instances deformation of the crown has taken place. Whenever a crown comes down from such cause, let it remain down if it does not exceed an inch. If you put it up, it will come down again identically to the same extent within $\frac{1}{32}$ inch, whereas, if you leave it down, it will remain a considerable time without any further alteration. It would appear that the plate had naturally taken up the best position to distribute the stresses.

We now come to the oil question. This subject has for years had my especial attention and I have had many analyses made of oil and boiler deposits from all parts of boilers under every conceivable condition, and I had this done for several years. I feel sure Mr. Gearing, who I see is present, will support me in saying that the late Mr. Parker, who was chief engineer to Lloyds, carried out, some seventeen or eighteen years ago, a series of experiments as to the effect of oil on a furnace crown

and thus bringing down the furnace crowns. In fact, the wonder is, not that the crowns came down, but that they stood up as long as they did. If the exhaust steam had passed over the side it is more than probable this accident would not have occurred, although I am well aware that in many, particularly in passenger, steamers this is inadmissible. Mr. Morison has designed a new type of condenser especially fitted for this purpose, but which he modestly has said little about, although he invites you to the Hartlepool works to see it at work. To those who are interested in this question I am sure such a visit would prove most instructive and astonishing, for it is remarkable how the oil is separated out. Although an excess of oil will bring furnace crowns down, yet, my point is, that under proper conditions of working and a judicious use of the best cylinder oils, there is little or nothing to fear under this head, which is evidenced by the number of steamers which make long and successful voyages. Nothing but the best hydrocarbon oils should be used in the cylinders, and a more foolish policy cannot be conceived than to use a cheap inferior oil for cylinder lubrication.

There is no difficulty in obtaining a satisfactory oil at the present day. Twenty years ago oil could be obtained having a vaporizing point of 260° Fahr. and a flash point of 415° Fahr., which we considered good; but to-day there is no difficulty in obtaining a really good hydrocarbon oil having a vaporizing point of 330° Fahr. and a flash point of 510° Fahr. On no consideration should animal or vegetable oils be used in the cylinders, as they produce fatty acids.

Many different opinions are expressed as to what takes place when oil enters a boiler. Oil enters the boiler in emulsion with the feed water and, owing undoubtedly to its lighter specific gravity, separates out and rises in minute globules to the surface, where they coalesce and form an oily scum on the water, showing no tendency to sink, as their specific gravity is lighter than the water, especially as the water becomes denser.

Average sea water may be said to contain 95 grains per gallon of calcic sulphate (sulphate of lime) in solution, which, when heated to 284° Fahr., separates out and, together with other constituents of the water, rises and falls with the convection currents. On coming in contact with the floating oil it absorbs it like a

sponge, and so increasing the specific gravity of the mass it sinks and adheres to the first hot plate it comes in contact with, the hotter the plate the greater the adhesion (see Mr. Dodds' analysis). More than probable, much of this floating oil might be blown out by a judicious use of the scum.

There is no doubt, in boilers using evaporated water having a light density, the oil will fall quicker and is more likely to do damage. Oil is usually found in greater quantities in the cooler parts, as no doubt it is driven off in the very hot parts, more especially when a plate becomes overheated.

There is another feature of Mr. Dodds' analysis which should not be overlooked and that is the quantity of zinc oxide given in the analysis. These boilers are reported as absolutely free from corrosion, which undoubtedly is due to the zinc used and which, I understand, is the outcome of a free use of "Zynkara," but I would ask Mr. Dodds if he can verify this.

Mr. Morison raises the old controversy of swabbing rods *versus* the lubricator. Personally, I have always been in favour of the lubricator, and it is a remarkable fact that although I have heard individuals say "there can be no oil in my boilers because I do not use a lubricator," yet I think Mr. Dodds will be able to tell you that in nearly every instance he has found more oil in boiler deposits where swabbing is resorted to and no lubricator used. This is my argument. My own opinion is that the lubricating oil should enter the main steam pipe, and, carried forward by the high pressure pulsating steam, it would be broken up as it enters the steam chest; for nothing more readily

The CHAIRMAN (Sir Thomas Richardson) said—I am sorry to have to claim your indulgence and ask you to allow me to leave. I will ask Mr. Tweedy to take the chair.

Mr. JOHN TWEEDY (Past-President) took the chair for the remainder of the meeting.

Mr. JOHN TWEEDY said—I can only endorse what has been said by previous speakers, namely, that all engineers must be grateful to Mr. Morison for his splendid paper. The paper is a model of what a technical paper should be, and the Institution is to be congratulated on possessing so able a paper as part of its proceedings. Anyone who, before hearing Mr. Morison's paper, had any doubt as to the effect of oil in the boiler must have had their doubt dissipated. Those of us who remember the early time of the triple expansion engine of twenty to twenty-five years ago will also remember that shipowners suffered even more in those days from what Mr. Morison calls "mysterious collapses of furnaces." A story is told of the reception of the chief engineer of a new steamer arriving in Melbourne. The new ship on arrival was at once boarded by a representative of a repairing firm. After shaking hands with the engineer and congratulating him upon his rapid voyage, the representative came to business by asking, "How many furnaces do you want?" The engineer, not having been in that trade before, did not quite catch the meaning of his friend and said, "What do you mean by furnaces?" "Well, how many have you down?" "I have none down; why should I have furnaces down?" "Dear me; that is a strange thing," replied the visitor, "we have your size and number and new furnaces are all here on the chance of being required, ready to be put in. It is quite an extraordinary thing that you should come all the way out here with high pressure boilers and not have some furnaces down. How do you account for it?" "Well," replied the engineer, who was a very old-fashioned sort of man, and had not got into the new ways of managing boilers and engines, "I dislike oil and have not used much on the way out, and then we give the fishes all our oily drain water." Another story is that an inspecting engineer, understanding this question of oil in boilers, and replying to a message from his engineer at the

experience has been that oily deposit is responsible for eight out of every ten collapsed furnaces we hear of. I have no doubt that the series of experiments which were carried out by the late Mr. William Parker, Engineer-in-Chief to Lloyd's Register, with a view of determining how far the conductivity of steel and iron plates is affected by oil films, will be familiar to many of you, and if so, you will remember that his experiments proved that, by painting an open steel dish with three or four coats of gluey deposit taken from the bottom of a boiler in which a furnace collapse had occurred, mixed with a little cylinder oil, it was possible to burn the bottom of the dish before the water in it boiled. It may interest you to know that in 1888, some years later, in conjunction with a well-known member of this Institution, I was called upon to investigate a case of local depression, which appears to confirm both the results of Mr. Parker's experiments, and the conclusions he was able to arrive at from them. In a vessel of foreign nationality, five out of eight corrugated furnaces had developed conical depression of a more or less serious character in the plain part of the furnace, between the last corrugation and the flange, one of which, however, was much more pronounced than the rest, for although the others had come down to the extent of from $\frac{5}{8}$ inch to 1 inch, this one had pocketed in the form of an inverted cone or pap $1\frac{1}{2}$ inches deep, and at the apex of the cone, it was drawn out and thinned from $\frac{9}{16}$ inch, the original thickness of the plate, to $\frac{1}{16}$ inch, where it was cracked and leaking. Except for these local depressions, the furnaces were otherwise intact, and both boilers were free from oily or calcareous deposit. (See Plate LXXIII., Fig. 1.)

After a most careful examination, my colleague and I, together with the owners' representative, found it well-nigh impossible to account for such an extraordinary condition of affairs, but here is the fact, that afterwards, several big dabs of hard red lead putty were found in the bottoms of the boilers, which bore a more or less close resemblance to the furnace depressions, one dab in particular looking almost as if it had been moulded into the pap I have described. I have always held the opinion, though I have no other proof of its correctness, that when the tube-plates were scaled in Calcutta by coolies, as we were told they were, dabs of red lead putty were stuck on the tops of the furnaces for use as candlesticks, and left there, so that

during the passage home the heat on the fire side of the plates drew the oil out of the putty into the depressions as they gradually formed. Thus local heating went on unnoticed until attention was compelled when the worst of them cracked and began to leak. The vessel in this case had to deviate from her course and put into a foreign port, where temporary repairs were effected, the damaged furnaces being renewed later on at no inconsiderable expense to the owners and underwriters.

In the case Mr. Morison has particularly alluded to, I may say that the boilers had recently been scaled, and it would be quite correct on a casual examination to describe them as clean and in good working order, that is to say, there was no incrustation and very little evidence of oil on the real heating surfaces, by which I mean the upper half of the tubes and furnaces, and the combustion chambers above the line of firebars. But there was a considerable amount of dark brown slime on the lower portions of these parts, and a good deal on the end plates and longitudinal stays at the water level, just where I expected and have almost invariably found it when investigating furnace mishaps. I do not think it had occurred to the chief engineer to examine these parts particularly, and as he boxed up and labelled the gluey deposits as I removed them, he was very much surprised to find that they existed at all. I would like to say that my experience has been that where accidents have occurred traceable to this cause, I have rarely or never found tangible evidence of it on the affected parts, though, generally speaking, one has not far to seek to discover it in the surroundings

test. Looked at from a purely theoretical point of view, the formulæ used appear to be correct enough, but is this really so? I think not, for I feel sure that many members of this Institution, and superintendent engineers generally, have found as I have, that where deformation of furnaces occur, as distinguished from collapse, it is almost invariably when the diameter exceeds 3 feet 3 inches or 3 feet 4 inches. Given sufficient provocation, say in the shape of calcareous incrustration, oily deposit, shortness of water, or lifting of water due to violent priming, any and every furnace will collapse, but I can see no good or sufficient reason for a furnace of large diameter altering its form more readily than one of smaller diameter when working under similar conditions. The fact remains, however, that when carefully gauged periodically, as is the practice in all first-class steamship companies, furnaces of large diameter, although working at no higher pressure, are found to alter their shape from true circular form, with greater frequency, than those of comparatively small diameters, without apparent cause.

I am quite aware that it is not an easy matter to arrive at a satisfactory explanation of this fact, but I think it is reasonable to assume that the trouble would in some measure be overcome, or at any rate minimized, by adopting a progressive calculating formulæ that would add a little to the thickness given by the present formulæ, as the diameter of the furnace tubes increased.

Mr. Ernest Gearing (of the Leeds Forge) said—I think it would be difficult to exaggerate the importance of the issue raised by Mr. Morison. For some years I have been obliged to look at it from the point of view of a man who has been asked to explain these mysterious accidents (I will so call them), and to state why one or more of a group of furnaces should deform. As a matter of fact, what I should like to reply would be the simple word Dirt in capital letters. But of course one cannot deal with a customer in that way, and I have always been compelled to resort to the statement of fact, that the steel from which the furnace or furnaces were made had passed the official Board of Trade and Lloyd's tests, and was in every way all that could be desired; still I am bound to admit that I have invariably had great difficulty in inducing my correspondent to look at the matter from my point of view. He has generally wanted to

attribute the failure to some inherent defect in the material or workmanship. It is an obvious fact that if you keep a furnace clean it will last much longer than one which is neglected in this respect. But this again is a difficult matter, especially as ships must of necessity make long voyages, though I think it will be admitted that it is cheaper to keep a furnace clean than to clean it. When a ship has to make such long voyages there are certain things which gather in the boiler, and which it is impossible for any man to keep out; at the same time, however, I have reports of ships running 157 days without steam being down, and still experiencing no trouble with the furnaces. All this proves, as Mr. Morison says, that it is advisable "to strive for that form of furnace which shows that it has the ability to minimize the possibility of local overheating, and to safely withstand the weakening effect of overheating, should it by any chance occur."

In my opinion, apart from adopting the best form of ridge and valley, the only direction in which you can go to attain increased strength is in the depth of corrugations. You must get more metal into the lineal foot of furnace. If you were to make a plain furnace of a plate half an inch thick and a foot long it would give a certain strength. To get the extra strength required you must increase the weight per foot run. It is impossible to obtain this in any other manner. And apart from that fact, it will be admitted, and it has been proved conclusively, that any form of corrugation with a sinuous curve, as in the Fox section, will tend to lengthen. I have carried out experiments for some years now, and this is the only possible form which you can

of this fact—that the inside roll over which the steel is bent is the governing factor—which led to the failure, in 1887, to roll furnaces of deep section. The extreme depth to which you can successfully roll a furnace of any section at one operation is about 1⅝ inches from inside to outside, because your inside roll comes up and fixes the position where the bend is to take place, and it will take place at that point in spite of anything you can do afterwards. This is stretched in the rolling, and of course you get a thinning of the metal at the point I have indicated, and therefore if you should commence to make a deep section of this kind it is absolutely impossible to obtain it in this way. You are obliged to make it in another preliminary form so that you can get sufficient metal to ultimately produce the deep section desired; so that in the process of making (Plate LXII., Fig. 2), the distance from centre of ridge to the centre of valley, must be the same in the preliminary form as in the finished, otherwise you will have thinning.

This, although a very simple thing, took several years to solve, and the first form of the deep section furnace in no way represents the ultimate form. This (Fig. 2) is the finished form, but the original section in the manufacture is nothing like it. The only thing is that the pitch of the corrugations remains the same. A furnace to be successful must have a ridge and valley; the ridge must be as narrow as possible and the sides of the ridge must be vertical, if possible, or a little inside of the vertical, and with such a furnace, if it should become overheated at any part, the very fact of the ridges being vertical will cause them to be higher up in the water than in the case of the old form of furnace. Heating of the valley would soon conduct to the ridge, but if you take this, which is appreciably deeper, some half-inch or more deeper, you are bound to have extra strength, simply from the fact that it will keep cooler owing to the motion of the water round it. These accidents are always costly. I have sometimes given a furnace rather than quarrel, because the oil question has undoubtedly been proved to be the secret in ninety-nine cases out of a hundred.

I think Mr. Morison deserves a hearty vote of thanks for bringing this question forward.

Mr. J. B. Dodds said—I think we must all agree in thanking Mr. Morison for the very interesting and exhaustive paper he has given us to-night.

For myself, I may say, I have been especially interested, as for something like twenty years marine boilers, from a chemical point of view, have been a great study of mine, and during that time I have had very frequent occasion to point out the damage done to boilers whenever a large quantity of oil or oily derivatives got into them. And on many occasions when my analysis showed any quantity of oil in percentage, ranging from 40 to 66 per cent., I was told that it was hardly to be credited, seeing that *no* "cylinder oil" was used, only just a little swabbing of the piston rods, etc., being allowed.

It is immaterial how the oil gets into the boiler, whether it be through a system of regular lubrication of the cylinders, or through a somewhat random system of swabbing, etc. It does get there, and after what Mr. Morison has shown us to-night the wonder would rather appear to be that it had not been found in even larger quantities. I have generally found that where the largest quantities of oil have been present, I have also found that the system of swabbing has prevailed. It prevailed in the case of the boilers, samples from which were sent to me, and the results of the analyses are given by Mr. Morison to-night. I cannot remember having ever found a larger quantity of oil in any previous samples. I think they are a very suitable series, and considering the condition to which the boilers were reduced, they very decidedly show the damaging effects which accrue from the presence of abnormal quantities of oil and oily derivatives.

I may say that from a chemical point of view, it is generally

boilers, it would have been more economical and necessary to increase the quantity of protective agent in whatever form such agent might be used.

I have almost invariably found, when collapse of furnaces has occurred, that it has been when the analyses of the deposits show the presence of large quantities of oil. It may be noted that the samples taken from the less highly heated portions of the boiler, are the richest in oil, or oily matters, whilst on the furnace crowns, where the damage has actually taken place, there is a much smaller percentage of oil found.

The oil and oily matter present in the boiler, either in solution or suspension, when it comes in contact with the heated surfaces spreads itself momentarily over them as a film of greater or less thickness, and by retardation of the passage of the heat to the water, causes these parts to become overheated until the temperature becomes sufficiently great to cause the film to be again driven off into circulation, and to repeat its attachment and detachment to the heated surfaces again and again, so long as the furnaces are fired. This applies particularly to the furnace crowns and accounts for oil not being found there in quantity.

In my opinion, a great deal of this oil question might be dealt with at the condensers. The condenser seems to be the most neglected part of the machinery. I have heard of condensers not being cleaned for seven years, and have seen and had samples sent to me from a condenser which had not been cleaned for four years. We must be glad to see that Mr. Morison is about to change this state of affairs. A condenser, the tubes of which can be kept free from oily deposit, must be more effective and must reduce the passage of oil from the cylinders to the boilers to a minimum.

I think we have to thank Mr. Morison very much for his paper.

Mr. Tom Westgarth said—It seems to me that the most important point in this paper is that of oil separation. I do not think Mr. Morison can devise a furnace, nor Mr. Gearing make one, that will be strong enough to resist the effect of oil in the feed water. Mr. Morison fully appreciates the danger of oil in a boiler and has invented a very perfect apparatus for extracting the oil from the exhaust steam. It happens that whilst Mr.

Morison was working at this question of oil separation I was also working at it. We have been separating the oil from exhaust steam under very difficult circumstances, and I can assure you from my own experience that it is an absolutely practical problem. We have fitted exhaust steam oil separators to installations condensing in one case 60,000 lbs. of steam per hour and in another case 100,000 lbs. of steam per hour; and we can clean the water so that it does not contain more than one part of oil to 300,000 parts of water. That, you will find, is more than sufficiently clear for a water-tube boiler working under high pressure. It may occur to you to inquire whether it is possible to carry out this separation of the oil from the exhaust steam when the exhaust is intermittent, as must often be the case in a receiver taking steam from winches. We had fitted an exhaust steam oil separator to an installation receiving the steam from two winding-engines, and, as you can easily understand, the conditions under which colliery winding-engines work are very severe indeed, because at the commencement of the operation of winding you require suddenly a very large power that is gradually decreased, and which is continually—every minute or two—passing from high power to no power. Yet under those conditions we can separate all the oil from the exhaust steam. It may interest you to know that we are now making an exhaust steam oil separator to cleanse the steam from engines indicating 15,000 horsepower. This idea, which may possibly be new to many of you, of taking the oil out of the steam, and not letting it go into the feed water—this system of cleaning the water

those in charge of boilers are sometimes apt to resent a discovery of oil as being a reflection on themselves, and when investigating cases of collapse one has to exercise considerable diplomacy in this respect. Oil is used in such small quantities nowadays for the internal lubrication of the main engines on board ship that the dangers of using very little are often overlooked.

The innocent brown powder so frequently found in boilers is one of the most deceptive deposits to be met with. It has not a greasy feeling when handled, unless it contains an abnormal quantity of free oil, and it mixes with cold water very readily. For these reasons many hesitate to believe that the powder contains any oil at all and in consequence do not realize the necessity of getting rid of it, and in some cases I have only succeeded in convincing engineers of the true nature of this powder by getting it properly analysed and showing them the actual oil. A simple method of ascertaining its true nature is by treatment with sulphuric ether, as by this means enough oil can be dissolved out as to indisputably prove its presence. A much simpler as well as a rough and ready test is to scrape some of it from below a furnace, and throw it on a hot shovel. It will be found to burn readily and give off enough smell to prove what it is.

I have met with cases where a very large quantity of this powder existed in the boilers, but very little was to be found anywhere except at the water level; whilst in others there was a comparatively small quantity, but it was evenly distributed over the tubes, furnaces, etc. The latter condition is the more dangerous and is no doubt brought about by the quality of the oil and the treatment of the boiler water.

With regard to the ability of the suspension furnace to withstand an increasing accumulation of deposit for a longer period of time before the metal becomes so weakened by overheating as to be incapable of resisting the steam pressure, I think that this ability has been taken undue advantage of in many cases and especially in boats in which there is no donkey boiler.

Mr. Morison's statement regarding the overstaying of boilers is very important and one that deserves serious attention. On this point I have actual experience, because I know of more than one instance where an accident was averted by taking out the

bottom tubes and cutting out the longitudinal stays at the furnace wings. The cure was complete and the boilers were also rendered more accessible for cleaning.

A case came under my notice some time ago where the bottom tubes were only 2¾ inches from the tops of the furnaces, that is, the distance from the underside of the tubes to the furnace crowns was 2¾ inches, the result being that the flange of the furnace was nearly torn off. Furnaces under these conditions have no chance of breathing and if they are under forced draught the evil is intensified.

Packing firebars too tightly contributes to the deformation of furnaces and should be carefully watched. In fact, it is by attention to these simple precautions, which, in the aggregate, results in the attainment of maximum boiler efficiency and a minimum of furnace accidents.

Mr. Richard Hirst, of Lloyd's Register (by invitation of the Chairman), said—I am very pleased to think I am able to be present to-night to hear Mr. Morison read this very instructive paper—so very instructive, in my opinion, that there is very little room for anything to be said about it. With regard to oil, we all know that it is better outside the boiler than inside; but when I first went to sea, which was some years ago, they used to provide tallow cocks on the boiler ends to put tallow and oil in, and if ever the boilers started to prime I did not hesitate to put a lot of oil into the boiler myself. We never had any collapse of the furnaces in those days. There was one firm on

only wash them out repeatedly and go to the expense of properly cleaning the boilers there would not be so many collapses of the furnaces. There is not the least doubt about it, as Mr. Tweedy remarked, owners do not like to pay too much money. I am glad to say I have no shares in ships. As Mr. Dodds has wisely remarked with regard to condensers, nine-tenths of the superintendent engineers whom I ask, "When did you clean your condenser?" will say they took the doors off and looked all round; but the thinnest coat on these tubes is bound to contain a certain amount of deleterious matter, and I do not think a condenser should be allowed to run the number of years they are now run without cleaning. The condenser is a very important factor in any engine. A condensing engine is not perfect by a long way with a greasy tube, and it should be more particularly attended to than it is at the present time. Now, with regard to what Mr. Geddes said about these short collapses in furnaces—in fact they come down, as I understand from him, in a sort of short pap—I have had a case in Liverpool recently of a similar occurrence in two or three boilers. The tubes had been driven back. Well, one would think there had been a lot of scale deposit shaken from these tubes and had dropped on to the furnaces, but in this instance, where these paps had formed, they had left candles and clay, which had in some way amalgamated. The furnaces came down in little short paps, and the flame impinging on the bottom of the curve had nearly burnt the plate through. A collapsed furnace is due to nothing else but dirt; and, as I have already remarked, if you will only try to keep the boilers clean by repeatedly washing out, I do not think you will be troubled with many collapses of furnaces. I can assure you that oil must be a great source of care, trouble and anxiety. When a man finds, on putting the salinometer into the tin it drops on to the floor, he begins to think what the inside of his boiler is like. That happened to me more than once, but I never had a collapse. I was always careful, whenever I got into harbour, to have the manhole doors off and wash out until I got rid of the scum and dirt. You will still have the collapsed furnace, no matter what curve you get, if you do not keep it clean. I had an experience of a large furnace in a land boiler of the Cornish type, where the feed was taken from a tank, into which several engines exhausted, containing a great amount of oil

amongst the feed water. The boiler was one amongst six, and the furnace came down with 10 inches of water in the glass flap. It was set up and came down a second time under almost similar conditions, and it was then decided to do away with the tank and no further trouble ensued. I thank Mr. Morison for his able paper.

Mr. Robert Henzell said—I do not know why I have been called upon to speak, except it is that I have the misfortune to be in the oil trade. I had no idea that oil was such a dreadful thing as I have to-night found out, after hearing all the charges brought against it. It is satisfactory to find, however, that the complaints are all made about bad oil.

I have very few remarks to make, as I agree almost entirely with everything Mr. Morison says in his paper. All the trouble referred to has, I consider, been caused by using the wrong oil and a poor oil, and I think such trouble is brought about by the individuals who buy the oil trying to save 2d. or 3d. per gallon on the price. Mr. Morison emphasizes all through his paper the importance of using good and reliable cylinder oil He says, "Inexperienced buyers, in their anxiety to obtain a cheap oil, often overlook the vital importance of quality." And again, "a non-technical buyer of oil may very severely handicap the engineer who is responsible for the efficiency of the machinery on which it is used." Speaking as one in the trade, I wish we could oftener deal with the practical man instead of the non-technical buyer. With regard to the price of oils, you

and viscosity and a low cold test. How can anyone expect an oil to have all these virtues at a low price? My firm has sometimes been asked to supply an oil at a shilling a gallon for high pressure and superheated steam. I do not think gentlemen expect their cart horses to win the Grand National or the Derby, and it is just as possible for that to happen as it is to get a cylinder oil suitable for the work mentioned unless a fair price is paid for it. One more thing I would like to mention is that there is not quite enough confidence given by superintendent engineers to us poor unfortunates in the oil trade, because after all, you would soon come to a standstill without us. I may suggest that there are some respectable firms in the trade and who understand their business from a practical side. I do think that some of us—not necessarily my firm but certainly some of us—are worthy of a little more of your confidence and I honestly believe that if you gave us that confidence it would pay you well. The paper just read by Mr. Morison has interested me very much indeed and must have entailed upon him an enormous amount of thought and labour. It seems to me that the most important thing is to prevent, if possible, any oil getting into the boilers. In any case, however, the safe course to pursue is to use a first-class cylinder oil for the benefit of the cylinders and in case any does get into the boilers a minimum amount of damage will be done.

Prof. R. L. Weighton (Vice-President) said—I did not intend to speak, but it just occurs to me that there is one feature of Mr. Morison's paper which nobody so far has noticed. To me it happens to be, perhaps, the most interesting part of it. The paper may be said to deal with two subjects, first, the proper geometrical form of furnace for maximum strength, and secondly, the effect of oil on this furnace; but it is really one subject as presented by Mr. Morison. I do not think there is anyone in this country who has rendered such services to the engineering profession with regard to boiler furnaces as Mr. Morison has rendered. I happen to know that he has studied the subject very closely indeed, and to him we are largely indebted for educating the authorities in this country whose duty it is to fix the strength coefficients of furnaces. He was the first to point out that the condition under which furnaces give way under work is not when rigid and cold, but when they are

more or less plastic; that no furnace with the usual factor of safety will fail unless it is treated wrongly in some way; that the furnace will only give way when it is overheated to such an extent that the material becomes more or less plastic. And not only that, but when it is overheated on a portion of its circumference and not all round. When it is heated on top, not below, then we have a condition when it is not only plastic, but plastic locally, and the material is no longer in compression throughout the circumference, but one part is in a more or less tensile state of stress. As Mr. Morison has pointed out, under these conditions the material in his furnace is really suspended. It is in the condition of a beam, part of which is in tension, and hence the reason for the suspension bulb furnace, having a ridge extending outwards, and therefore not liable to be coated with any deposit, which suspends or sustains in position the part in the valley which becomes plastic and therefore weak, due to deposit and the consequent overheating. This was Mr. Morison's great point in the matter of furnaces, and he has followed it up and has shown that the catenary is the only true geometrical shape to give the valley curve in a corrugated furnace, if you wish to have the maximum strength with the minimum amount of material, or to have a structure which will work with the maximum amount of safety under conditions which obtain in a boiler liable to be coated with various non-conducting substances on the water side, the principal non-conducting substance being derived from the oil used in the engines.

COMMUNICATIONS RECEIVED ON MR. D. B. MORISON'S PAPER.

Communication from Mr. Edwin Griffith:—

9, MISTLETOE ROAD,
NEWCASTLE-UPON-TYNE,
13*th April*, 1905.

DEAR MR. DUCKITT,

As I cannot be present to-morrow evening, I take this means of sending a few remarks on Mr. Morison's valuable paper.

On a recent visit to Hartlepool, I saw the samples of oily water which Mr. Morison had taken off his shop engine for the meeting of the Institution, to show the inefficiency of filtering the feed water, and he kindly took other samples in my presence which corresponded in appearance with those set aside for illustration. I was the more interested in the subject because for some months past I had been considering extracting the oil from the exhaust steam of auxiliaries when used with direct-contact feed heaters in turbine installations, and had come to the conclusion that this would be the rational procedure. But the exhaust steam separators in common use on land engines have to be very bulky to obtain even a fair degree of efficiency, because they depend on baffling, without any definite provision for preventing the separated oil from returning in part to the steam; and we have had experience of this defect with large engines for electric generators. Mr. Morison's device, however, should meet this difficulty in an effective way, and enable an apparatus of a reasonable size to be adopted on board ship for the purpose I have indicated.

The section of the paper dealing with the proper shape of furnace corrugations seems to me to be a sound application of mechanical principles to the conditions of actual service.

I feel that the Institution is greatly indebted to Mr. Morison for presenting so interesting a paper, and I hope that a good discussion will follow.

Yours faithfully,
EDWIN GRIFFITH.

Communication from Mr. W. P. Henry:—

SOUTH SHIELDS,
17th April, 1905.

DEAR MR. DUCKITT,

I regret I had to leave the meeting before being called upon to offer some remarks on Mr. Morison's paper. I therefore send you the following:—

An interesting feature of this class of subject, the author's position and reputed experience to deal with it, command attention to his ideas and deductions. It should be beneficial and of assistance towards the important desirability of the agreement of the experts in the Board of Trade and different classification corporations in deciding a standard and avoiding discrepancies in practice at present between some of them.

Many of us will leave without criticism Mr. Morison's opinion of the doubtful satisfaction of the methods of testing and the formulæ for designing the furnace, before it is given a certificate that guarantees it as sufficient to withstand any legitimate stress under fair, but somewhat ideal, conditions. What many of us have witnessed must compel us to admit that certain furnace tubes under our control have more than substantiated the guarantee certificate of their stamp mark, whereas others again, which were apparently under identical conditions of working, compel us to query the possibility of every factor used in its design and manufacture as being the best possible.

In practice it is a fact that some furnaces have in their initial

facture, I agree that the uniform longitudinal thickness in furnaces is preferable, from the standpoint of danger, owing to expansion and contraction under working conditions. Quite recently a case was under my observation, where furnaces were condemned owing to the circumferential splitting, due, I was sure, to no other reason than the arguments Mr. Morison adduces against the thickened ridges.

In mentioning the importance while being manufactured, Mr. Morison reminds us of the precautions rightly taken, to ensure the full thickness at the flanging. I do not think he alludes to what is of equal and possibly more importance, namely, the longitudinal weld. I have under observation furnaces which, in other respects satisfactory, have a very decided defect in the welding. This did not develop until some months after actual working, when it showed itself in a marked degree by the disintegration of the material. Had it not been very evident that this, call it corrosion, was on and directly in line of the weld, it would have raised the suspicion that the cause was due to, say, deleterious constituents in the boiler water. I have this defect in two sets of boilers, but have been successful in allaying its progress of deterioration. I have heard of other cases and think this is essentially a case where manufacturers may save the user at least one anxiety of the many he has to contend with in trying to keep perfect what is delivered to him stamped, signed and sealed, as a thing of perfect form and without visible or invisible blemish.

Mr. Morison, with a kindly compliment, desires the assistance of superintendent engineers' experience on points he raises. Many of them, unfortunately, have had more or less experience with collapsed, or at least, distorted furnaces, and I think many will agree that this is particularly so, since the introduction of the corrugated furnace. It will be said that this may be accounted for by the contemporary introduction of higher pressures. We must not forget, however, that this was met by those responsible for its design with a similar factor of safety. Thus, outside of the possible ill-effect of increased complication due to higher temperature on deleterious acids and agents of corrosion in the water, the ratio should be the same to-day, all other things equal, with the plain furnace of older practice.

Referring to the many enemies which are either voluntarily or unknowingly introduced into boiler water, I often think that

those which we are sometimes compelled to introduce are made the scapegoat for troubles which occur, whereas they are caused by factors entirely beyond our control. I deprecate the introduction of internal lubrication of slide or cylinder surfaces, and I shall now be more emphatic after Mr. Morison's assertion that furnaces can be distorted and probably ruined by an invisible and fractionable film. Since the introduction of the piston valve, one great necessity for internal lubrication disappeared, and in engines of that design I find no necessity whatever for introducing oil except that which is carried up by the piston rods, which are swabbed with a reputed good oil.

Mr. Morison does not deal with the contentious point of the relative merits of different sections of furnaces, in their relation to being scale holders or breakers. My observation leads me to suspect that the corrugated furnace is perhaps overrated in this respect, as compared to the plain furnace tube.

Regarding the arguments that oils and acids are the active agents towards all troubles with furnaces, I remember quite recently that this was made the defence for great trouble with a pair of new boiler smoke-box tubes. Bad oil, lack of filtration arrangements, superfluous air by feed arrangement, etc., were adduced as arguments in favour of the contention, yet, although these tubes were completely ruined under nine months' working, the furnaces and all other heating surfaces were perfect. At least two reputed experts decided that the principal agents of destruction were oils and acids. Under exactly similar conditions of working the new sets of tubes (by different makers) [illegible] in perfect condition.

when they solicit favours, they invariably produce analytical certification proving their commodity is by far the most efficient for its purpose, although it is the cheapest.

Some years ago it was my duty to examine a pair of boilers and I found both shell and all heating surfaces, including the furnace crowns, almost completely covered with oily deposit. The engines were of the flat H.P. slide valve order and the engineer had for years used a great quantity of oil to assist its working. The furnaces were of a certain corrugated design, and although they were in places measurably corroded, their shape, cylindrically, was perfect. Experiences of this kind make me sceptical, when I hear it asserted that the small film of oil, which, meanwhile, has evaporated, to avoid arrest, is held responsible for the collapse of the furnaces.

We invariably find that furnace tubes which, in ordinary working "come down," as we say, in many cases do so gradually and persistently at that point which is the centre of the beam. I am not referring to furnaces which have collapsed because of shortness of water or any other drastic experience, but of furnaces to which are given the best attention on the essentially important points of freedom from excess of scale and cleanliness. This leads us to suspect that, under ordinary and fair circumstances, furnaces, which are reputed able to withstand the working pressure, are either from their design, method of manufacture, or nature of the material, not able to do so.

Mr. Tweedy, who saw nothing to adversely criticize in Mr. Morison's arguments, must have anticipated some such arguments as my own when he hoped Mr. Morison's paper would prove to be the final guillotine of practical argument on a very debateable subject. Nothing in the paper or experiments disabused my opinions, formed after a few years' responsibility for, and constant examination of, a great number of marine boilers, not only in building but in actual work, and of various ages.

Mr. Tweedy hoped we had now heard the last of arguments in respect to furnace tubes ever being defective because of defects in material or workmanship. I am not positive whether he also intended defective *design* to likewise disappear from our boiler defect dictionaries, and yet Mr. Morison, both by sound argument and experiment, clearly proved all other designs but the last creation to be more or less a menace. As the latter

is the youngest on the market, we have as yet only the agreed *defective designs* under our control, and if accident happens, Mr. Morison at least will, if the thin film of oil or deposit is not found, admit the possibility of design entering into the argument of responsibility.

Where were the representatives of other designs to prove, either by theory or models, that their sections had equal virtues to that which the lecture led up to? Many members will remember elaborate advertisements assuring us of another particular design I have in my mind as being the ideal one, and giving more elaborate statistics, figures of comparison, certified tests, etc., which proved (*sic*) it.

Mr. Morison reminds us of the admitted defect in the Fox furnace in the item of partial stagnation of gas, due to the outward corrugations being sheltered by the inward. Comparing the Fox with the latest suspension, I consider the latter will have the same defect in a marked degree. It certainly has fewer ridges than a Fox, but the action will be more severe at each.

It is instructive to find Mr. Morison advising us that there has, *until recently*, been difficulty in the manufacture of corrugated furnaces from reasons he mentions, but owing to a *recent* invention we can now expect perfection. This must emphasize my contention that furnaces, which we are responsible for working to-day, are under disadvantage from methods of manufacture, which accounts for many collapses which were decided as due to some chemist's theory or deductions.

Mr. Morison is in a position to protect the reputation of the

Communication from Mr. H. B. Buckland:—

BALTIC CHAMBERS,
NEWCASTLE-UPON-TYNE,
29th April, 1905.

DEAR MR. DUCKITT,

We must thank Mr. Morison for bringing this matter before us. He seems to start away with the idea that nearly all furnaces which collapse or partly come down, or get out of shape, have been caused to do so by one of three reasons, oil or dirt, or shortage of water. I think a number of our fellow members will have had somewhat the same experience, as I have had in more than one case, that is, that furnaces have come down when there has been no overheating through either a deposit of oil or scale, nor through a shortage of water in the boiler, greatly puzzling some people as to how it has happened. I think that most of these cases will be found to have taken place with "corrugated" furnaces (used in contradistinction to "plain").

The fault, in my opinion, lies in the boiler having to be stayed up tight, end to end, with heavy solid stays that are in the coldest of the water in the boiler, that is, near the bottom, and therefore cannot expand the same as the furnace does, or rather as the furnace wants to; and as it cannot expand longitudinally, it has to go out transversely, and consequently alters its shape and flattens, and if the tubes are, as often is the case, close to the furnace crown, thus giving the boiler ends no "breathing," they will perhaps flatten first and then "pocket," often before the flattening has been found out.

A case that I have recently heard of happened like this, but has stopped at the flattening, and there is little doubt in my mind that it will remain at that, as a permanent set, and be none the worse for it. All nine furnaces were practically alike, down about 1 inch.

The seaming on top of corrugations or ribs, which is pretty frequently met with, is in my opinion caused in ninety-nine cases out of a hundred, simply by the boiler ends having no breathing, being stayed up too tight. This, of course, comes back to my old argument that a plain furnace is the best, and gives least trouble to keep clean from either dirt or oil, as there are not

the pockets of the corrugations in which to collect the oil or dirt. Furnaces might, with safety and practically no loss of fuel, be increased in thickness to over an inch, thus doing away with the necessity of these thick longitudinal stays, or if, as at present, the powers that be, will not allow an inch or over in the thickness of the furnaces, then I most emphatically say, double your end plates, or better still put in three small furnaces in place of two large, and four in place of three, and make your furnaces plain, so as to act as a stay for the boiler ends.

As I have mentioned the four furnaces, I would just like to say a word about the design of boilers with four. In many instances I have seen them made with the two centre furnaces into one combustion chamber and the wings having chambers to each. Now this is nothing like such an economical boiler as with each wing and a centre into one chamber, for in this design the flames from the one furnace greatly assist the combustion of the gases from the other furnace, this being done with all the grates, and not only with the two centre ones as above mentioned. The advantage gained, of course, is just doubled.

Mr. Morison is no doubt right about the testing of furnaces by cold water; but how else can it be done?

Of all the forms of corrugated furnaces, I believe the "Deighton" to be as good as any other, and I certainly like it better than Mr. Morison's Improved, because I think that in the latter the curves of the corrugations are too small, and the plate stands a good chance of being too much "punished."

One point more: if we take into consideration the extra

Communication received from Mr. J. H. Buchanan:—

5, Oswald Street, Glasgow,
16*th May*, 1905.

Dear Mr. Duckitt,

Before making any remarks on Mr. Morison's very important paper just read, I would like to say that, to appreciate it properly, one must, I think, read his most exhaustive paper of 1892 on the same subject.

In the present paper the author has, I think, rendered us a service, in drawing attention to the variations on the requirement of certain registration bodies as to furnaces, and I hope we are all agreed that these differences exist for no good reason at all, but merely originate in the fancy of some official, or in an idea that it looks well to have requirements differing from others, or differently expressed.

In passing, I may remark that my own practice has been lately, when required to design boilers to pass more than one of these sets of rules, to construct the boiler in accordance with each without reference to the other, and to have it passed and tested by each for a different pressure, so that should the requirements of one body or another be discarded (as for instance when no passenger certificate is wanted in a particular trade) the higher pressure may be used, and the handicap to which the vessel had originally to submit to by these unreasonable differences in the rules be to some extent removed. As a matter of fact, I only get some 10 lbs. more on 180 lbs. working pressure, but in particular cases somewhat more than this may be obtained at a moderate extra cost. Possibly others may have done the same, but I have not heard of it; and I think the circumstance of new boilers being made and passed for two distinct pressures, supports the author's views as to the unsatisfactory conditions which govern, to a large extent, marine boiler construction. He takes exception, I gather also, to the thickness of furnaces and the large factors allowed for in certain rules relating to corrugated furnaces; but if I understand him aright, I am not at all sure that his views on this point will meet with general approval; and I would direct attention here to what seems to me a great difficulty in reducing the margin of strength, namely, that the

corrugations are all, say, 2 inches deep, and do not alter with the diameter of the furnaces; hence, I take it, we must allow a wide margin, as the assistance the corrugations give in practice is not exactly known except for the particular diameters and thicknesses which have been tested to destruction.

It is of course impossible to have the corrugations changing in size with the diameter and thickness of the furnace, but in theory they should so differ.

Passing to the remarks as to forms of corrugations, as I worked at the construction of the original testing cylinder for the first corrugated furnaces made, I may be influenced by this in favour of the original device; but although I have tried all the forms of corrugation referred to, and admire the enterprise of those who introduced the various later types, they are all to me simply a copy of Mr. Fox's great work, and have in practice no material advantages over his original form.

I would remark that a part of the paper refers to a condition of things in connection with the deck machinery of steamers with which I have no acquaintance, namely, the use of oil of any kind (except possibly to a very limited extent in new winches, etc.), in or about the cylinders; such a practice is, I think, so extremely rare, that I fear the author must have been misinformed on this point, and should trace the oil to some other source. I think he will find that the finer the oil, the more difficult to extract, and the further it goes also the more difficult it is to trap in any way. I have for many years used nothing but the very finest pure mineral oil, and I find that it leaves no

whether any trace of oil can be seen or not, it has been there and would have just the effect which has occurred. The furnace maker's information then stops dead. He cannot tell you anything more about it, whether the furnace can be restored to something like its original form, or whether this had better be done cold or by heating, or whether it would assist to free it lengthwise by removing the fore and aft stays, which furnace makers say they dislike; they have no advice to give at all, a condition of things which leads me to question their information generally, and to respectfully accept their statements as to the behaviour of furnaces more as ideas than as facts.

Yours faithfully,

JOHN H. BUCHANAN.

NORTH-EAST COAST INSTITUTION OF ENGINEERS AND SHIPBUILDERS.

TWENTY-FIRST SESSION, 1904-1905.

PROCEEDINGS.

THE CLOSING BUSINESS MEETING OF THE SESSION WAS HELD IN THE LECTURE HALL OF THE LITERARY AND PHILOSOPHICAL SOCIETY, WESTGATE ROAD, NEWCASTLE-UPON-TYNE, ON FRIDAY EVENING, MAY 19TH, 1905.

R. H. MUIR, ESQ., VICE-PRESIDENT, IN THE CHAIR.

The SECRETARY stated he had received a telegram from the President, Lord Armstrong, expressing his regret that owing to an engagement in London he would be unable to attend the meeting.

The SECRETARY read the minutes of the previous meeting held in Newcastle-upon-Tyne, on Friday evening, 14th April, 1905, which were confirmed by the members present and signed by the Chairman.

The CHAIRMAN appointed Mr. David Andrew and Mr. D. B. Morison to examine the voting papers for new members, and the following gentlemen were declared elected:—

MEMBERS.

Crouch, Herbert, Shipbuilder, c/o Messrs. The Thames Iron Works & S. B. Co., Tidal Basin, London, E.

Elliott, Richard G., Shipbuilder, 1 62, Chillingham Road, Heaton, Newcastle-upon-Tyne.

Schofield, Charles, Marine Superintendent, The Globe Pneumatic Engineering Co., Limited, Newcastle-upon-Tyne.

Williamson, Gordon, E. Surveyor, 59, Dudley Crescent, Leith, N.B.

Mr. Frank Little replied to the discussion on his paper on "Petrol Motor Cars."

Mr. J. F. C. Snell replied to the discussion on his paper on "The Application of Electricity to Industrial Purposes."

Mr. D. B. Morison replied to the discussion on his paper on "Boiler Furnaces and the effect of Oil on their Ultimate Strength."

MR. FRANK LITTLE'S REPLY TO THE DISCUSSION ON HIS PAPER ON "PETROL MOTOR CARS."

In reply to Mr. Barker's remarks as to the application of the petrol motor car to railway work—there is no doubt about the developments that are taking place in this direction, and we are indebted to Mr. Barker for his remarks, and for the illustrations he has shown us of the petrol car to carry 32 passengers. It will be an immense advantage over the petrol electric car, owing to its freedom from complications. I have not had the pleasure of seeing this particular car myself, but should be interested to know the system of control and the type of gearing employed, as herein lie the difficulties.

With regard to the President's statements that the North Eastern Railway Company had not found petrol so economical for heavy road traction as steam, I understand now that they have since ordered a large number of petrol vans and omnibuses, so that they have evidently met with recent success in this direction. My own firm has been experimenting with petrol vans and lorries for some considerable time, and we undoubtedly find petrol more economical than steam for rapid transport with loads up to two tons.

I regret Mr. Fothergill was unable to take part in the discussion owing to his illness, because he has taken such an interest in the paper.

Mr. Philipson was good enough to raise the question of springs, and with his long experience in carriage building, his remarks are of much value. He also draws our attention to the Ackermann system of steering. There is certainly much room for improvement. It is very important that the front steering wheels should be parallel to each other. There are very few motorists who study this problem, or they would not exceed the legal limit driving round corners, if they knew of the wear and tear on the tyres in so doing. The Duryea car is an attempt to counteract this action.

I cannot fall into line with Mr. Philipson's remarks on solid tyres. For economical motoring, up to 22 miles per hour—

which is well over the legal limit—cars can be designed to run with reasonable comfort on solid tyres. I think Mr. Philipson must have had in his mind the early days. I must admit that there are not many cars that are designed to take solids, so that some discretion must be used in choosing a car to take them. If one can afford the time and expense, by all means have pneumatics, and, of course, this applies to cars required to run above the legal limit. The time will come no doubt when something equivalent to the pneumatic will be invented, without the bug-bear of punctures, and I hope soon.

In reply to Mr. Wallis, the two-cycle engine is not used on motor cars, owing to its increased weight per brake horsepower, its lower efficiency and the difficulty to maintain after use the compression in the crank chamber. Again, it would not be possible to control its speed the same as with the four-cycle engine, from, say, 200 to 1,000 revolutions per minute. I have recently made some enquiries amongst the motor boat builders, and the majority, I find, are now using the four-cycle engine in preference to the two-cycle. Considering these two types side by side, and working under equal conditions as to speed and fuel, it would be reasonable to imagine that the two-stroke engine would develop twice the power of the four-cycle; but this is not so, owing to the leakage of the charge, and the dilution of the mixture with the products of combustion remaining in the cylinder. The compression in a two-stroke motor is not carried so high as the four-cycle. It has been pointed out that the actual gain in power exceeds 60 per cent.

required by Mr. Wallis's ideal carburettor. The surface carburettor is not likely to come into practical use on large cars, owing to its size.

Magneto ignition troubles are really due to motor car builders giving this subject only secondary attention. It requires to be built simpler, and designed to withstand rough usage. The magnets alone should revolve, only the armature being stationary. I am a firm believer in magneto ignition, and have never experienced any trouble with the Albion type illustrated: it is about as simple as it is possible to make one.

Accumulators and coils have always been a constant source of annoyance on cars.

I agree with Mr. Wallis that clutches and gear boxes leave room for considerable improvements. The orthodox Panhard type is about played out; the next best being the "always in mesh" type, and direct drive on top speed.

Regarding transmission gear, the disadvantages of the live axles over counter-shaft and chain drive, are viz.:—Loss of power in end thrusts, and at the arbor shaft; inability to change speed ratio of engine to car; and greater strains brought to bear, and means necessary to strengthen the live axle casing in travelling over unequal roads. Very few makers of heavy petrol wagons employ live axles. Mr. Berriman, in his communication, mentioned a very satisfactory method of dealing with this difficulty, by mounting the wheels on the axle casing, and using the axle itself merely as a driving shaft.

With regard to compensating brakes, this should be carried out by all makers in some simple form, to apply equal pressure on each brake.

Mr. Berriman has raised many interesting points. Spring loaded valves on automatic carburettors cause very erratic running of the engine. Some engines take a considerable time to pick up speed, due to this cause.

Regarding the driver's control of the motor, I concur with Mr. Berriman that the time of ignition should be automatically regulated by means of the governor, because, in the hands of an inexperienced driver, and especially for commercial vehicles, enormous damage can be done to the crank shaft; by such means the driving is made practically fool proof, the driver being relieved of all responsibility in regard to manipulating for cor-

rect mixtures and ignition, which is automatically varied and adjusted by the governor fitted. It is then impossible for the novice to make a mistake, and simplifies the management considerably.

Mr. Berriman refers to the multiple disc clutch, and his point raised about the separation of the discs is an important one to remember, because some cars fitted with a clutch which failed to separate might lead to serious consequences. The separation should be as instantaneous as possible to avoid accidents.

His remarks regarding the 100 H.P. Napier racer, and the 80 H.P. car driven by Mr. S. F. Edge in last year's Gordon Bennett Race, having been fitted with live axles, does not alter my opinion that live axles are limited to cars of moderate power and weight, because racing cars are not designed for everlasting wear-and-tear, and generally have the best roads chosen for such performances as record breakings, and are fitted with pneumatic tyres.

Mr. Berriman's reference to Mr. Gale's analysis of the steering problem is interesting, and such investigations all tend towards the perfecting of the automobile.

In conclusion, I thank all the members who have taken part in the discussion.

The Chairman (Mr. R. H. Muir) said—It is my duty to move a hearty vote of thanks to the reader of the paper. He has given us a very interesting paper, and one that is very useful to those who

MR. J. F. SNELL'S REPLY TO THE DISCUSSION ON HIS PAPER ON "THE APPLICATION OF ELECTRICITY TO INDUSTRIAL PURPOSES."

Mr. J. F. C. SNELL replied to the discussion on his paper on "The Application of Electricity to Industrial Purposes." He said—I am sorry that at the last two meetings, when this paper was discussed, circumstances prevented me from attending. I am particularly sorry because there were certain things said by some of my critics which I should have challenged had I been present, and I am sorry to note two gentlemen in particular, Mr. Mountain and Mr. MacColl, who are not present to-night, because I shall have to criticise somewhat severely the remarks they have made.

I thank Mr. Unwin for his remarks on my paper. His experience emphasizes his remarks and enables him to stand as a critic whose opinions ought to be very considerably respected. I am glad to note he agrees with me as to cost of separate works, and confirms the figures put in my paper. He states, however, that the costs from the power station point of view are on the high side. I think that is quite possible. I put them on the high side so that I should not, as a power station man myself, be accused of being unfair. He points out an important point which I did not in my paper, and that is the concentration of power into one big station represents a very considerable saving of capital outlay—a saving of hundreds of thousands of pounds in the case he states. I think we should all congratulate the Tyneside Power Company on the phenomenal success they have met with, and I believe they have a bigger future before them, as is evidenced by the rapid strides they are making.

Mr. Broadbent, whose experience also entitles him to be heard with considerable respect, agrees with me in general, and his experience also confirms the figures which I put before you. On the other hand, he gives a small shipyard example in which he states that the saving in labour—comparing the old forms of driving with the new electrical driving—has paid for the interest and sinking fund on the new generating plant. I do

not like that way of putting it, because it seems to be a specious argument. I would rather he had put side by side the cost of the old driving at the works and the cost after the change to electricity. I agree with him as to the polyphase motors and the elimination of switch gear, and I commend the wise remarks at the end of his letter to manufacturers, and also his remarks on increased production. Engineers, I notice, in contemplating the change to electricity, eliminate from their consideration the large increase in output from the works themselves when the change to electricity has been made. It certainly does result in a larger tonnage of output from the same installed plant. I have two cases before me in Sunderland, and I hope to have an opportunity at a later period of putting before you some curves which will emphasize what I am saying.

I regret, with Mr. Mountain, that there are so many frequencies employed with alternating currents. In Newcastle, we have a frequency of 40. It is only fair to say that the supply was started before the Standards Committee in London had issued its conclusions. Now, Mr. Mountain disagrees with my estimates, and I must beg the meeting to give me a few minutes, because the assertions which he made in his written communication to this Institution are too serious to allow me to pass over without comment. I noticed there was an excerpt from his letter in the local press, and notes of that kind, coming from so eminent a man as Mr. Mountain, are bound to carry weight. At the same time I join issue with him on the figures he laid before you, and I state most emphatically the estimate he put

yet met the man who would rate that at 600 but at 300 kilowatts and therefore Mr. Mountain's cost per kilowatt would at once be doubled. Then again he gives us two sets of estimates, and he gives £1,500 for the cost of three boilers in the 600 kilowatts station, and £1,500 in the 750 kilowatts station. You could not get three high-pressure Lancashire boilers for £1,500. I at once double that figure and make it £3,000. That is by way of example. Again, in his estimates he apparently makes his stations non-condensing; therefore I add to his total the cost of a condenser and condensing pipes. Then, again, in the cost of the engine-house for this comparatively large amount of plant set forth in the estimate, he only allows £800 for buildings. I want to know where his chimney is coming in. It would cost that for a chimney alone. If he is not to have a chimney, he has to put in an induced-draught plant, and the cost of that, initially, is as much as a big chimney. Therefore, instead of giving the figure of £800 for the cost of the engine-house and boiler seating large enough to contain three sets of engines and dynamos, I multiply that figure by 3 and say £2,400 instead of £800. I am certain he cannot get a building put up—unless he put up a corrugated-iron shed—it is an impossibility to get his buildings, seatings, engine foundations, and other contingencies necessary, for the sum of £800, and I feel sure any sensible engineer who knows anything about estimating will rather take my higher figure. He contends my figures of £45 are three times too much, and except for the estimates which he puts in his written communication, he has not disproved the figure I have put before you.

I now leave the question of capital cost and come to the question of the cost of production. He states that in the Rhondda Valley, including interest and depreciation, the cost per unit generated was ·4d.- $\frac{2}{5}$ of a penny, and in a small colliery near Newcastle the price was ·45d., and that for a small installation of only 124 kilowatts. I have figures of colliery installations, taken by an engineer of proved reliability, whose name I am not at liberty to divulge—you must take it on trust. In this colliery there are 100 kilowatts of three-phase plant installed. The load factor is 66 per cent.—a better load factor than in Mr. Mountain's example—and the cost is ·726d.

Therefore, I say that Mr. Mountain's figures are wrong and

not substantiated, or, if they be correct, then they are phenomenal. Curiously enough, I did not get these figures for these collieries until after this paper had been read to this Institution, but on reference to Plate LVIII., it is curious how this figure ·726d. substantiates that point on the curve for a 66 per cent. load factor. The actual cost gives us ·66d. In this case it works out to ·726d., so it is very near, and obviously my figure as given is a very fair one.

There is another point: he says three-phase users of plant should take care to see that they are charged for true watts and not apparent watts—that is, the true amount of energy and not the apparent amount of energy. He should know that three-phase meters do register, within 1 or 2 per cent., true watts, and for him to assert or give the impression that three-phase meters measure some 25 per cent. more than they actually and truly record is quite misleading. Three-phase meters supplied by anybody actually register—within the limits of human correctness—within 2 or 3 per cent. the true watts supplied.

Mr. Barker then challenges my statement about 5 per cent. loss in belts. Just let me take his own figure. He says the ratio of electrical to indicated horsepower is 85 per cent. Every mechanical engineer will agree that in most engines the ratio of brake horsepower to indicated horsepower may be taken to be 91 and the ratio of electrical horsepower to brake horsepower is 95 to 96 per cent. Now, the combination of those two gives a resulting efficiency of 87·36 to 88·27 per cent., which

regret that even so racy and breezy a critic as Mr. MacColl, should make such statements without substantiating them, because a remark like his may mislead the public and do the industry a great deal of harm. Now, Mr. MacColl quotes relative figures of electrical power and gas. The cost quoted for electricity he gives as 8s. 4d. per day in a particular case. As a matter of fact, a mathematician would arrive at a figure of 7s. 3d. The cost of gas he gives at 2s. 3d.—a mathematician would arrive at 4s. 6d. But the cost of electricity covers everything. In addition to the cost of gas, however, one has to add the cost of oils, water, stores and a bigger item for repairs than one would have to do in the case of electrical motors. Everyone who has used electricity and gas will agree with me thus far. He does not state—and he knows as well as I do—that there is a large firm in Sunderland which was using gas-engines at 1s. 6d. per 1,000 feet which has discarded its gas-engines and is now using electricity at even a higher figure than Mr. MacColl states, and is turning out more material for horsepower, and its cost is less than formerly. I hope to put these authenticated curves before you at a later period. Mr. MacColl throws some doubt on the accuracy of my figures, and I do think he goes beyond the bounds of polite criticism. The figures which I stated in that paper are not vouched for by myself but by the two firms in particular and checked independently for them. So that you may take it the figures given in the paper are correct, despite Mr. MacColl's doubts. Then, in one's own interest, reference must be made to one other matter. He says somewhere that "the Corporation of Sunderland charge their small consumers $2\frac{1}{2}$d. per unit and their larger consumers $1\frac{3}{4}$d., and I believe they have proved to the satisfaction of the Tramway Committee that this is a reasonable charge." Mr. MacColl says:—"By some ingenious arrangement, analogous to dumping, they are selling current to certain favoured individuals at about $1\frac{1}{16}$d. to $1\frac{1}{8}$d., but I do not know how long the simple-minded ratepayers will stand this" (page 247). Mr. MacColl here shows a lamentable ignorance of facts. It is true we are supplying the tramways at $1\frac{3}{4}$d., and it is true we supply some large works at $1\frac{1}{8}$d., but Mr. MacColl knows that the engine-works have a load factor of 47 per cent. and the tramways only have a load factor of some 22 per cent. Let Mr. MacColl say if he can turn out a 50 horse-

power engine at the same cost per horsepower as he can turn out a 5,000 horsepower engine? Of course not; and the same law which applies to the production of engines and to their cost applies to the production of units of electricity, and it is surprising that a man of Mr. MacColl's standing should show such regrettable ignorance of first principles. As a matter of fact, I venture to predict that Mr. MacColl will yet use electricity himself, and that he will regret he has put these matters on record, and one is very sorry for him.

Mr. Vardy has touched on the right point, but he falls into error by stating that they are hypothetical figures when they are the actual figures taken over a long period from actual consumers. He asks me to reply to one question, what is the power factor of a shipyard station? In a particular case under my control the power factor is 71 per cent. with 837 kilowatts of motors installed in small motors, the load factor in that case being 47 per cent.

I am sorry that during this discussion some of the big users of electricity have not come forward to express their opinions. The fact is, that they are getting it so cheaply on Tyneside that they don't want to rake up this question.

I thank you for the patient hearing and kind reception you have given me.

The Chairman (Mr. R. H. Muir) said—We have to thank Mr. Snell for his paper, and the interesting discussion we have had on it. I beg formally to move that we give Mr. Snell a hearty

MR. D. B. MORISON'S REPLY TO THE DISCUSSION ON HIS PAPER ON "BOILER FURNACES AND THE EFFECT OF OIL ON THEIR ULTIMATE STRENGTH."

Mr. D. B. Morison said—It was very appropriate that the discussion on a paper dealing with boiler deposits should have been opened by Mr. J. R. Fothergill, to whom engineers are already indebted for some valuable contributions on the subject.

In my anxiety to include all the data which I thought might be of interest, I have, in some cases, unfortunately failed, through brevity, to convey the meaning intended. This is particularly the case with regard to my remarks on the testing of furnaces to destruction by cold water pressure by Board of Trade and Lloyd's, for the purpose of constructing a formula by which manufacturers calculate the pressure allowed for a given diameter and thickness. I again say that whilst this test is necessary I do not consider that it indicates the comparative strength to resist collapse of different designs under conditions of work in a boiler. For example, assume two furnaces of different designs, one design based on the known and proved requirements of actual practice as regards equality of thickness, easy curvatures, and distributed longitudinal elasticity; the other design having unequal thickness and localized elasticity. Both may collapse at exactly the same pressure under cold water test and so be granted the same strength value by the Board of Trade, etc., but under conditions of actual work in a boiler the latter would prove a failure. My opinion therefore is, that in assigning strength coefficients or figures of merit to furnaces of different designs, the resistance to collapse under cold water pressure should not be considered *alone*, but always in conjunction with those features in the design which influence the strength of the furnace when in use in a boiler and especially when some portion of its wall has reached the temperature of plasticity.

With regard to a standard method for the testing and calculation of the strength of furnaces, it would be of great convenience to engineers if the chiefs of the various surveys met

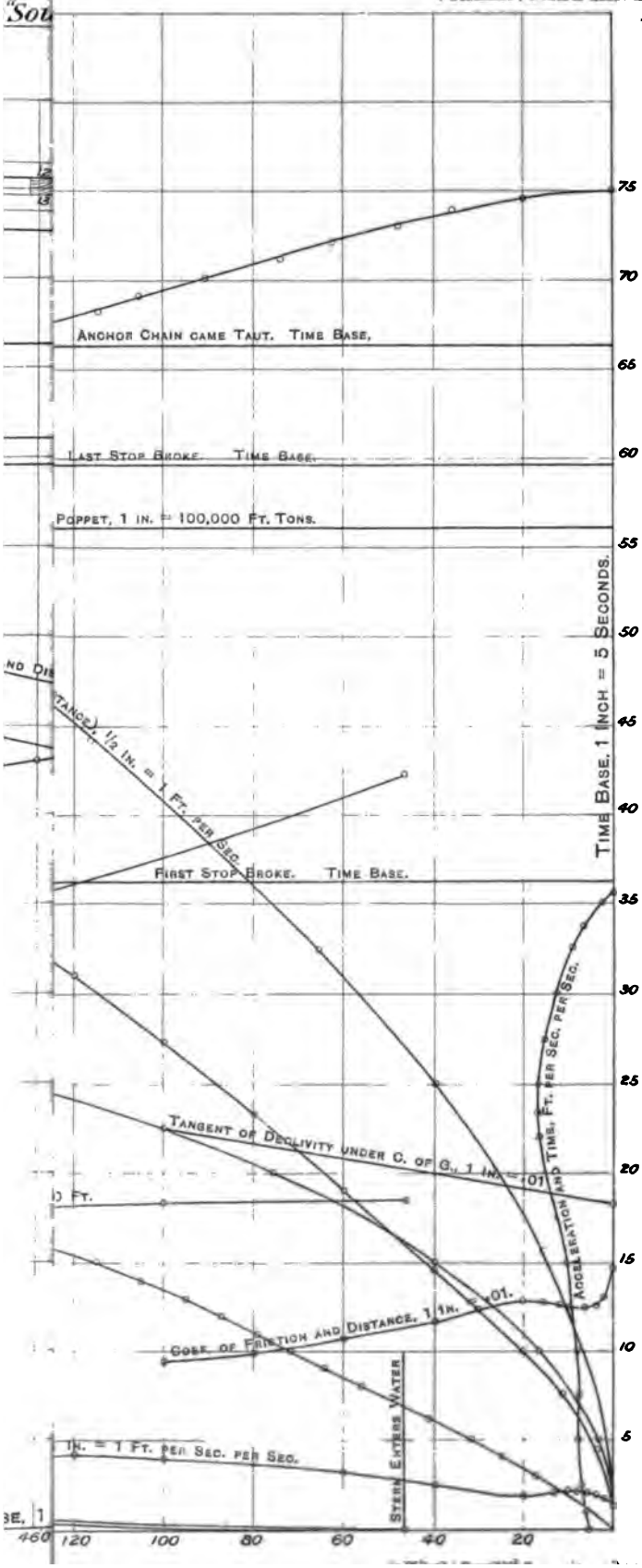
ANCHOR CHAIN CAME TAUT. TIME BASE.
LAST STOP BROKE. TIME BASE.
POPPET, 1 IN. = 100,000 FT. TONS.
TIME BASE, 1 INCH = 5 SECONDS.
FIRST STOP BROKE. TIME BASE.
ACCELERATION AND TIME, FT. PER SEC. PER SEC.
TANGENT OF DECLIVITY UNDER C. OF G., 1 IN. = .01
COEF. OF FRICTION AND DISTANCE, 1 IN. = .01.
STERN ENTERS WATER
75
70
65
60
55
50
45
40
35
30
25
20
15
10
5
460
120
100
80
60
40
20

in friendly conference and arrived at one common conclusion. Since my paper was written the engineer-in-chief of the British Corporation informs me that the range of tensile under their new rules is now the same as the other surveys, viz.: 26 to 30 tons; but much has yet to be done before all the surveys are in line. For example, suppose it is required to ascertain the pressure allowed for a suspension furnace of the original design, 36 inches inside diameter and 9/16 inch thick. The following are the calculations:—

Board of Trade:

$$\frac{\text{Coefficient} \times \text{Thickness in inches}}{\text{Minimum outside diameter in inches.}} = 212{\cdot}5 \text{ lbs.}$$

Lloyd's:

$$\frac{\text{Coefficient} \times (\text{Thickness} - 2, \text{ in } \tfrac{1}{16} \text{ inch})}{\text{Maximum outside diameter in inches.}} = 219{\cdot}0 \text{ lbs.}$$

British Corporation:

$$\frac{\text{Coefficient} \times (\text{Thickness} - 2, \text{ in } \tfrac{1}{16} \text{ inch})}{\text{Minimum outside diameter in inches.}} = 218{\cdot}6 \text{ lbs.}$$

Mr. Henry, in his communication on page 297, asks in effect why cases of furnace distortion have been more frequent since the introduction of the corrugated furnace than previously, notwithstanding the fact that increased steam pressures have been met by increased thickness, thereby maintaining an equal factor of safety.

This assumption of an equal factor of safety is another phase of the cold water test fallacy. A furnace collapses because *the*

pressures by simply adding to the thickness of the metal, but rather by so disposing metal of a given thickness as will enable the furnace to withstand the weakening effect of local overheating for the longest period of time without collapsing. . . . Mr. Buckland referring to the same subject says Mr. Morison is no doubt right about test of furnaces by cold water pressure, but how else can it be done? My reply is that the results obtained by cold water destructive test should be combined with an intelligent appreciation of the conditions under which furnaces are worked when in a boiler. Mr. Buchanan will therefore see that I am not in favour, as he supposes, of reducing the strength of furnaces, as I am convinced that, especially for high pressures and forced draft, the factors of safety are quite low enough at present; but in order to obtain a greater factor of safety I would add to the weight of the metal by more effective disposition and by increased depth of corrugation, and not by increased thickness.

Mr. Fothergill's remarks on the oil question are very valuable, being based on careful investigation and extended experience. The absence of any evidences of corrosion in the boilers of which the furnaces collapsed, to which I refer in my paper, was very noticeable and was, no doubt, attributable to the use of soda and zinc in the form of "Zyncara." Few engineers have had such opportunities for investigating furnace failures as Mr. Geddes, and he tells us that after eighteen years' experience, his opinion is, that 80 per cent. of furnace accidents in marine boilers are directly attributable to oil, and Mr. Gearing's estimate is much higher. The general use of evaporators has rendered excessive scale of comparatively rare occurrence, so that neglecting shortness of water and the deformation which results from overstaying and defective design of boiler, such as Mr. Shute draws attention to, it is difficult to conceive of any other cause than oil to which the overheating or local plasticity of furnaces can be attributed. Mr. Henry as a superintendent engineer is very sceptical on the point and would blame material and design, or both, but whilst hard or high tensile steel undoubtedly induces cracking, it cannot have any influence on collapse: indeed I have never heard of a case in which the steel from a collapsed furnace has been found, on being re-tested, to have had its physical properties impaired to any appreciable extent. Broadly, therefore, it is an unquestionable fact that the plasticity of

furnaces in modern marine boilers is directly attributable to oil. Mr. Buckland is another confirmed sceptic and is very desirous of seeing a furnace that can be definitely proved to have collapsed through oil. I am glad to be able to gratify Mr. Buckland's wish, as recently, in a boat belonging to a well-known company, six plain furnaces in boilers not a year old collapsed so badly that they had to be cut out and were replaced by "suspensions." The upper surfaces of the furnaces were practically clean, being covered with a slight brown powder, so the accident was at once placed in the "mysterious" category. Some of the deposit taken from the boiler bottom was so dark in colour as to indicate corrosion. The chemical analysis of the deposit, however, quite disproves corrosion and is as follows:—

Free oil: Oil only held mechanically absorbed by bases	40·4 per cent.
Combined oil: Oil or oily derivation chemically combined to bases ...	20·5 per cent.
Bases: Consisting chiefly of lime and magnesia with a little oxide of iron	39·1 per cent.
Total	100·0 per cent.

Mr. Henry is apparently not disposed to accept an analysis or deduction carried out by a chemist, so in deference to his evident prejudice I have here the actual mineral oil extracted from the deposit as well as the deposit after the extraction.

Reference has already been made to the fact that collapse

to discharge the drains from the receivers of the main engines and the exhausts from the auxiliaries overboard rather than into the boilers; in fact, if engineers sampled the feed water daily from the principal sources, and registered the approximate amount of oil contained in emulsion, they would very quickly take the necessary precautions whenever oil was found in dangerous amount. The Emulsoil Indicator, illustrated on Plate LXXIV., is a simple apparatus for this purpose. It consists of a series of hermetically sealed tubes containing oil in emulsion in various quantities graded in grains per gallon, so that by filling a test tube with feed water and comparing it with the tube in the indicator approximating to it in colour the amount of oil can be at once determined. If Mr. Buchanan will do this with the feed water in some of his main engines and also the feed water from winch condensers, he will no doubt find that it contains oil in appreciable amount.

I referred in my paper to the fact that the drainage water from the steam chests of a marine engine contains a large percentage of the oil used for internal lubrication and the swabbing of rods, and that this oil passed off in two conditions, viz., as float oil and oil in emulsion. Mr. Geddes has recently designed an apparatus, as illustrated on Plate LXXIII., Fig. 2, in which an automatic trap is combined with a receiver for collecting and retaining this float oil from the I.P. and L.P. steam chests, so that it may be discharged as desired. I have applied the apparatus to an engine with most satisfactory results and there is no doubt whatever that if attention is given to the float oil which can be collected from the drainage water, and if the drainage water containing oil in emulsion is discharged into an evaporator instead of into a boiler, there will be fewer accidents from overheated furnaces and, what is of great commercial importance, the efficiency of the boiler will be definitely increased.

Mr. Buckland is so prejudiced in favour of plain furnaces that he would increase their thickness to an inch and increase the number of furnaces in a boiler by reducing their diameter. It is perhaps fortunate that the surveys will not allow Mr. Buckland to give practical effect to his opinions on thickness, and as regards diameter I have always found small diameter furnaces, of any design, associated with inefficiency of boiler.

No greater mistake can be made in marine engineering than

to allow extreme conservatism to prejudice commercial possibilities. Marine engineers as a body are conservative, and rightly so, by reason of the serious pecuniary consequences of accidents on shipboard, but competition in shipowning is now so severe that to ignore any detail which has been accepted and proved to favourably influence efficiency, and especially boiler efficiency, is equivalent to wilfully prejudicing maximum commercial success.

In conclusion, I desire to thank those members who contributed to the discussion and added so materially to the value of our proceedings.

The CHAIRMAN (Mr. R. H. Muir) said—I am sure you will quite anticipate what I am about to say or do in proposing a vote of thanks to Mr. Morison. He is one of our members who has the power of interesting his fellow engineers season after season. In a very interesting series of papers which he has laid before this Institution he has always given us something worth listening to, and something which adds considerably to the value of the *Transactions* which we publish. This paper is not behind those which have gone before it, and the lessons to be derived from it are received by engineers with the kindest regards to Mr. Morison for directing their attention to those points. I would only ask you to agree with me in proposing a very hearty vote of thanks to Mr. Morison for his very able paper.

The motion was carried with loud acclamation.

CLOSING BUSINESS.

ALTERATION OF BYE-LAW 11.

The CHAIRMAN, on behalf of the President and Council, moved that the following alteration be made in Bye-law 11 (the alteration is printed in italics):—

> "11.—The Annual Election of Officers shall be conducted in the following manner:—The Council shall meet in March or April, and shall arrange a list of nominations, in accordance with the Form H in the Appendix. It shall nominate new names in the place of the retiring Members, and the number of nominations shall be ~~one~~ *two* in excess of the number required in each section of the Council. (See Bye-Law 47.)"

Mr. DAVID ANDREW seconded the motion, which was carried *nem. con.*

RE-ELECTION OF AUDITORS.

Mr. D. B. MORISON proposed that Messrs. R. W. and J. A. Sisson be re-appointed auditors.

Mr. A. HARRISON seconded.

The motion was unanimously carried.

ELECTION TO COUNCIL VACANCIES.

The CHAIRMAN declared the names of the gentlemen elected to fill the vacancies in the Council list as follows:—

President—The Right Hon. Lord Armstrong.

Vice-Presidents—Messrs. W. H. Dugdale, Summers Hunter and James Marr.

Hon. Treasurer—Mr. G. E. Macarthy.

Ordinary Members of Council—Messrs. G. J. Carter, A. Harrison, N. E. Robson, R. Wallis and G. D. Weir.

VOTE OF THANKS.

Mr. C. GEDDES said—I am sure I shall have your unqualified support when I suggest we should not allow this meeting to close without tendering a hearty vote of thanks to the retiring members of Council for the valuable services which they have given us. I now ask you to join with me in giving a hearty vote of thanks to them.

The proposal was agreed to with enthusiasm.

The CHAIRMAN said—There is only one thing to do now, and that is to declare the session closed. I hope it has been a successful one, and that the members have really enjoyed it, and that next session we shall have a larger number of papers. The Secretary has already put in form, and will shortly issue, the subjects for papers, and he will be pleased to receive any notes from members desirous of reading a paper next session.

The meeting then dissolved.

REPORT OF THE WORK OF THE CONSULTATIVE COMMITTEE APPOINTED TO CONFER WITH THE MARINE DEPARTMENT OF THE BOARD OF TRADE TO 5TH MARCH, 1905.

The following subjects were referred to and reported on in former reports, namely:—

Water Tube Boilers;
Hydraulic Test Pressure of Boilers;
Use of Higher Tensile Steel for Engine Forgings, and Reduction of Scantlings;
Measurement of Engine Room Spaces;
Testing of Materials.

The matters following have been the subject of special communications from the Committee to Shipbuilder and Engineer employers since the date of our last Report, namely:—

Use of Corticene as a substitute for Wood for Sheathing Iron and Steel Decks in Passenger and Crew's Quarters, and otherwise;
Position of Board of Trade as to issuing Italian Certificates of Tonnage;
Testing of Steam Pipes;
The Furnishing of Plans of Pumping Arrangements to the Board of Trade.

In addition to the foregoing, the principal subjects which have received the attention of the Committee since the date of their last Report on 11th June, 1903, up to 5th March, 1905, have been as follows, namely:—

New Regulations issued by Board of Trade in December, 1903, in substitution for Instructions issued in November, 1902, which amended Section 23 of the Regulations for the Survey of Passenger Steamers;
Freeboard of Hopper Barges;

Surveyor's Fee.—Payment of a Fee or Deposit to Board of Trade before Board allows drawings of proposed vessels to be Examined;

Engineer Apprentices.

The following questions and matters have been examined and dealt with, namely:—

Questions relating to Measurement of Tonnage—

Should fore and after peaks fitted as water ballast tanks with manholes only be exempt irrespective of height of top in relation to water line?

Considered Board of Trade requirements reasonable.

Why should partially ceiled tank top be measured regardless of ceiling?

If ceiling permanent should be exempt.

Should steering engine space in and open to engine casing if added to tonnage form reduction as part of air and light space?

Space occupied by steam steering engine when situated within the engine casing above the upper deck is always exempt from measurement.

Should space occupied by electric light engine and dynamo in engine space be measured in with engine room tonnage?

Not required for propelling vessel and so cannot be

Should topside ballast tanks in a new type of vessel be exempted from tonnage?

Modified plans have been accepted by the Board of Trade, but matter still under consideration by this Committee.

Questions relating to Requirements for Passenger Certificates—

Why should vessel carrying say 15 passengers, Division A, Class I., require less boat capacity than vessel without passenger certificate, Division A, Class IV.?

Present rule seems reasonable if passengers carried, boat capacity would require to be equal to carry passengers and crew.

Is it to be understood that only one boat on each side in the case of Division A, Class IV., requires buoyancy tanks, and that the remainder can be boats of Section D without buoyancy tanks, and yet be calculated as life saving appliances in the ordinary way?

Board of Trade Rule quite clear—one boat on each side to have buoyancy, the others required are of ordinary type.

Testing of turbine Condensers?

Certificate of vessel with regard to which this question was raised was granted after appeal to Court of Survey.

Alteration of previous practice as to Surveys by Board of Trade without previous notice having been given by the Board.—The Committee have suggested three months' notice.

Circulating Pipes and Fittings on Boilers.—The Committee considered the requirement of Surveyor not unreasonable.

Light Load Line Report.—The Report of the Light Load Line Committee was noted.

Accommodation for Crew on Hopper Barges.—Committee consider that Surveyor justified in his requirements in this matter.

Written communications on important subjects to be required from Headquarters instead of mere verbal statements by Local

Board of Trade Surveyors; and Uniformity of practice among the Surveyors.—Both these matters will be mentioned at next conference with Board of Trade.

Fitting of Freeing Ports to Shelter Deck Vessels.—Matter settled between Board of Trade and builders of vessel, which was fitted with Collinson's Scuppers. Board of Trade waived demand when informed that owners objected to the fitting of Freeing Ports.

Ventilation of Crew Spaces.—Committee of opinion that each state room should have a goose-neck ventilator of about 3½ inches or a mushroom ventilator of about 6 inches diameter in addition to a butterfly ventilator in the door. On the forecastle head such ventilator should stand well above the deck; and for the purpose of ventilating the forecastle, or other large space, one or more cowl ventilators standing well above the deck should be fitted.

The subjects of the Hydraulic Test Pressure of Boilers—the Thickness of Boiler Shell Plates—the Use of Higher Tensile Steel for Engine Forgings and the Reduction of Scantlings—Measurement of Engine Room Spaces—the Use of Corticene or other similar Materials for the covering of Iron or Steel Decks in lieu of Wooden Sheathings and—the Issuing of Italian Certificates of Tonnage by the Board of Trade—(the question of the Uniformity of the Rules for the Testing of Materials and Calculations for Scantlings being held over until the Report of the Standardization Committee thereon should be made), were

that, as they are responsible for the safety of the public, the factor of safety in these matters must remain as at present in the present state of knowledge. Mr. Samson explained that a rule for the general employment of higher tensile steel could not be made, but that all special cases would be considered with the intention of sanctioning the use of all properly made material after stringent tests thereof had been carried out by himself.

Measurement of Engine and other spaces for Tonnage.—A Departmental Committee has been appointed by the Board of Trade to enquire into the operation of Section 78 of the Merchant Shipping Act, 1894, whether or not it tends to produce in any class of ship a disproportionately low registered tonnage in comparison with the gross tonnage, and, if so, to report what amendments may be required by way of fixing a limit to the deduction for propelling power which shall be reasonable and equitable, and it is possible that a re-adjustment of the present rules for measurement may result from the Report of the Committee.

Testing of Materials.—This subject has been held over until the particular report of the Standardization Committee which deals with the matter has been received.

Use of Corticene.—In a communication from the Board of Trade dated 31st October, 1903, which was printed and widely circulated by this Committee, the Board stated the circumstances under which alone the Board of Trade would sanction, after experiment, the use of such corticene as is used by the Admiralty. The experiments referred to have not yet been made, but a large shipbuilding firm has kindly agreed to recommend to shipowners, on the first favourable occasion, that such experiments with corticene (Admiralty) should be made.

Position of Board of Trade as to issuing Italian Certificates of Tonnage.—Notifications that the Board of Trade could only, by convention with the Italian Government, issue such certificates to British ships, and that this would be done as formerly, were issued by the Committee immediately after the conference at the Board of Trade, in October, 1903.

Testing of Steam Pipes.—The Committee are of opinion that all main steam pipes and all other pipes subject to the pressure

of steam or hot water and 4 inches and upwards in diameter, should be tested in the coppersmiths' shop to twice working pressure, but that any testing beyond this—especially the testing of pipes *in situ* should be resisted, and the opinion of the Committee on the subject has been communicated to the Board of Trade—the Committee adding a suggestion to the letter that three months' notice should be given of all alterations.

Furnishing of Plans of Pumping Arrangements to the Board of Trade.—The question of furnishing the Board of Trade with plans of midship sections, which was under consideration by this Committee some time ago, has been revived by the Board of Trade surveyor at Hartlepool having made a request upon a shipbuilding firm there that he should be supplied with a midship section of, and a plan of pumping arrangements in, a vessel which they are building, and which is to have a passenger certificate.

When the question was first raised this Committee went very fully into the matter and placed themselves in communication with all the leading shipbuilding firms in the kingdom on the subject. After carefully analysing the replies which had been received it was found that opinions were pretty equally divided and the Committee therefore passed the resolution of which a copy appears in their last report practically leaving it in the hands of each shipbuilder to exercise his own judgment, but pointing out that the Board of Trade has no legal right to demand the submission of ships' sections.

[redacted]

of the plans by the local or any other surveyor, but on the conditions contained in the Merchant Shipping Acts and the regulations laid down by the Board of Trade being complied with, which the surveyor must ascertain in the ship itself, and stated, that as regards the practice of the shipbuilders generally in the matter of giving surveyors copies of pumping arrangements, the Committee would make further and fuller inquiries, but as at present advised the practice seems to be to permit the local surveyor to see these plans in the builder's office and to make any notes or remarks he may think fit. The Committee are accordingly now ascertaining from shipbuilders generally what the practice is in the matter of giving surveyors such copies of pumping arrangements.

New Regulations for Surveyors. The question of the new regulations issued by the Board of Trade in December, 1903, in substitution for instructions issued in November, 1902, which amended Section 23 of the regulations and suggestions as to the survey of the hull, etc., of passenger steamships with reference to the furnishing of midship plans was brought under the notice of the Committee by the Secretary of the Clyde Shipbuilders' Association at the instance of one of the members of that Association, but the Committee on looking into the matter were of opinion that on the whole, after comparing the old set of instructions with the new ones, the latter were more favourable to shipbuilders than the former inasmuch as the Board of Trade no longer required to have submitted the mid section of vessels classed in a recognized registry, and the secretary of the Clyde Shipbuilders' Association was duly informed of this opinion of the Committee.

Freeboard of Hopper Barges.—A question raised by a shipbuilding firm as to the method adopted by the Board of Trade in assigning freeboard to hopper dredgers was remitted to the Subcommittee on Tonnage, who reported that they had found some difficulty in dealing with it and made some suggestions on the subject. The General Committee, after carefully considering the matter, instructed the Secretary to write to the firm by whom the question had been raised, that while agreeing with them in some of their contentions the Committee were of opinion that certain conditions might arise in the working of dredgers which would

MEMOIRS.

MR. WILLIAM BLACK, J.P.

Mr. William Black was the son of Mr. James Black, for many years a timber merchant in Newcastle-upon-Tyne. He was born at Airdrie on the 9th of February, 1823. He was one of the pioneers of Tyneside industry. He commenced his commercial career in the service of Messrs. Cookson's Jarrow Alkali Co., and was still connected with it when it was taken over by Mr. Jas. Stevenson, father of the late Mr. Jas. C. Stevenson, so long the representative in Parliament of South Shields. He severed his connection with that firm a few years afterwards, as the chemical trade was affecting his health, and he started a small iron foundry at Fatfield, near Washington. About the year 1860 he took over the foundry of Messrs. Stainton, at South Shields, and re-named it the North-Eastern Foundry, and as such the business prospered until it became the largest and most important marine foundry on the North-East Coast. About the year 1865 he became associated with the late Mr. Hilton Philipson, the late Mr. H. T. Morton, and other well-known Tyneside gentlemen in the founding of the engineering establishment of Messrs. Black, Hawthorn & Co., of Gateshead, a business which was carried on until about eight years ago. These works are now occupied by Messrs. Ernest Scott, Mountain & Co. In conjunction with the same gentlemen he started the St. Bede Chemical Works, East Jarrow, which were eventually amalgamated with the United Alkali Co. He also assisted in successfully promoting the North-Eastern Marine Engineering Co.'s works at Sunderland and at Wallsend.

Mr. Black became a member of this Institution in January, 1885. He was also a member of the North of England Institute of Mining and Mechanical Engineers, and the Institute of Mechanical Engineers, London. He was a naturalist and antiquarian and took a useful and active interest in the Natural History Society in Newcastle. He also enjoyed the distinction of being a Fellow of the Zoological Society.

For a great number of years he was a resident in South Shields, where he spent the greater part of his remarkable and benevolent career. His interest and affection for the town and its institutions never flagged in after life. When he went to Newcastle to live he never failed in his benevolence towards organisations and institutions with which he had previously been associated. He was always interested in athletics, and at one time he was an ardent athlete himself. He filled the position of President of the South Shields Rowing Club. He was also President of the South Shields Cycling Club, and a vice-President of the South Shields Cricket Club.

He was one of the founders and the most munificent benefactor during its career, of the South Shields Choral Society. He possessed refined musical tastes, and was always foremost to assist any movement for the cultivation of the people's tastes for high-class entertainments. About forty years ago he originated the North-Eastern Foundry Glee Club, which he kept going for many years at his own expense.

Being a man of true nobility of character, combined with many fine social qualities, he was held in high esteem by all with whom he was associated.

For some time prior to his decease he had been in failing health. He died on the 12th of July, 1905, in the 84th year of his age.

After holding that position for a short while he opened an office in Sunderland and from that day to the time of his death continued in business on his own account.

During his professional career he designed some of the best buildings in the town, including the Cobden Exchange, both the one that was recently burnt down and the one that is now being erected; Messrs. Grimshaw's premises at the corner of Fawcett Street and High Street, which were one of the first terra-cotta buildings in the country; the Pottery Buildings, High Street East; Messrs. Pearman & Corder's establishment, Union Street; Messrs. Corder & Meng's buildings opposite the Town Hall, in which his own office was situated, and which represent the highest form of terra-cotta art, in which he was regarded as an expert. He also laid out several of the principal residential estates in Sunderland, including the Thornhill and Tunstall Road estates, and was also connected with Seaburn.

As a civil engineer he occupied a very high place in his profession, and in 1893 he was elected a fellow of the Royal Institute of British Architects, and was twice president of the Northern Association of Architects in 1901 and 1902. He frequently acted as an arbitrator and assessor in important cases. Some years ago, he caused some sensation in a Parliamentary committee room when he produced plans which showed that the designs for the new bridge over the Wear were so defective in regard to levels that if the bridge were built from them one end would be several feet in the air; and a few months ago he rather startled people in this part of the country by asserting, in conjunction with Mr. T. W. Backhouse, that Sunderland in some parts had subsided several feet.

He was the designer of a pier at his native place, which was regarded as a model of its kind in regard to standing stress and strain. This pier, which may be regarded as Mr. Caws' chief work, is a beautifully artistic-looking erection, on the suspension principle. The design was the result of the application of principles adopted after years of special study of suspension bridges, and although nothing of a merely ornamental character was introduced, yet the beauty of the natural curves of the main cables was so emphasised by the proportion and arrangement of the other features as to produce an excellent general effect. It consists of five suspension spans—three of 200 feet each and two

of about 140 feet, the total length of the pier, including the fan-shaped head, being 1,120 feet. He also designed a suspension bridge to cross the Wear at Stanhope, and was the architect for the sheds in the shipbuilding yard of Messrs. Swan & Hunter, at Wallsend. Probably his most important invention was a patent tank for ascertaining from a small scale model of a ship what her displacement and speed through the water would be at different loads and a given horsepower, and in connection with this he did a considerable amount of testing for shipbuilders both at home and abroad.

He possessed a highly original, inventive and experimental turn of mind and great artistic ability. He was a skilful engineer and mathematician.

Mr. Caws was elected an Associate of this Institution in 1892. He contributed the following papers:—"On Certain Principles of Motion as taught by the Pendulum, and as Illustrated by the Resistance of Ships and Other Bodies moving through Fluids," which was read before the Institution in 1893. In 1894 he also read a paper entitled "An Account of some Experimental Studies of Ship Acceleration and Fluid Resistance," and in 1899 he read another on "The Increasing Frequency of Failure of Propeller Shafts."

He took a lively interest in the Graduate Section of the Institution, and when the members of this section held their meetings in Sunderland his rooms were not only placed at their disposal, but frequently they were invited to partake of his kind hospitality.

Works, in which undertaking it is believed he lost the earnings of a lifetime. Young Christie was apprenticed, at his own request, in a shipyard at Dumbarton. Having served his time, he went a voyage round the world in a sailing ship, the "Waterloo," built at Sunderland in 1848 This vessel, it is interesting to recall, was 135 feet long at the keel, 34 feet 7 inches extreme breadth, and her depth of hold was 22 feet. She was of 898 tons register, classed for thirteen years A1 at Lloyd's, and her construction cost the owners £18,000 with one suit of sails. While at sea he studied navigation and made himself a competent seaman: he was thoroughly well versed in the knowledge of everything belonging to the gear of a sailing ship, and of the somewhat forgotten and complicated phraseology connected therewith.

After going round the world, Mr. Christie engaged himself as a foreman with a firm who had commenced building iron ships at Liverpool. While there he was occupied on the construction of the "Carbon"- probably the first water-ballast screw collier ever built. She was constructed without frames, and her midship section was similar in some respects to the turret ships at present being built by Messrs. Doxford, at Sunderland. Mr. Christie was not long at Liverpool before he was appointed manager to Mr. Alexander Denny, shipbuilder, of Dumbarton, and there he was employed during the Crimean war. He built many vessels, principally for passenger service, and indeed it may be said that the cargo steamer proper, or "tramp," did not then exist.

In 1857, Mr. Christie married Miss Pond, a daughter of an Anglo-Indian, and the happy couple left for Brighton, where the honeymoon was spent. But grim misfortune was close on their heels. The first morning's post after the marriage brought news that the bridegroom's employer, Alexander Denny, had suspended payment; and the next post advised the young man that the Western Bank of Scotland, in which he had invested all his savings, had also stopped payment. In fact the stoppage of the Bank was the cause of the inability of certain shipowners to fulfil their obligations to Mr. Alexander Denny and had resulted in that gentleman's failure.

Mr. Christie did not succumb under these severe trials. He went to see Mr. Brunel, who was then engaged in the building

of the "Great Eastern" steamship, and his services were engaged by Mr. Brunel to assist in the building and completion of that huge vessel. Mr. Christie told Mr. Brunel that the steamer could never pay, nor even be worked, as she was built. Her decks were 16 feet apart beam to beam, and Mr. Christie proposed to fit an intermediate deck between the two. His suggestion, however, was not carried out, and, as everyone knows, the "Great Eastern" was never employed in carrying passengers.

In 1859, Mr. Christie made the acquaintance of Mr. Wigham Richardson, who was then a young man not twenty-three years of age. Mr. Richardson was about to begin shipbuilding on his own account, and made a commencement in March, 1860, on the site of what now forms a portion of the Neptune Works, appointing C. J. D. Christie his manager. Two years later Mr. Christie became his partner, and this partnership continued until the works were formed into a limited liability company in 1899, when he became a director. When the company known as Swan, Hunter & Wigham Richardson, Limited, was formed in 1903 by the amalgamation of Wigham Richardson & Company, Limited, with C. S. Swan & Hunter, Limited, Mr. Christie was appointed a director of the joint concern—a position which he occupied at the time of his death.

Mr. Christie's career as a Tyne shipbuilder practically embraces the history of the firm of Messrs. Wigham Richardson & Company. They have constructed every variety of merchant vessel, from the finest mail and passenger steamship to the simplest collier. During his long connection with the firm, Mr.

which left the Neptune Yard in 1888. She was both externally and internally one of the finest looking vessels which have ever left the Tyne, although some of the earlier clipper steamers designed by Mr. Christie with old-fashioned quarter galleries would to some eyes be even handsomer specimens of the naval architect's art. During the Spanish-American war, the "Alfonso XII." was pursued by a United States warship and, riddled with shot, she was driven ashore and became a total wreck.

All his life a hard worker, Mr. Christie well deserved the success which followed his early difficulties and discouragements, and he earned the esteem and respect of all who came into contact with him, both in business and private life. He was of a retiring disposition, and perhaps only those who knew him most intimately could fully appreciate his sterling qualities. He was associated with this Institution from its commencement. He died on the 13th of May, 1905, in the 75th year of his age.

MR. JAMES DYKES.

Mr. James Dykes was born in 1854, in Dumbarton, and commenced his apprenticeship as an engineer with the firm of Messrs. Randolph & Elder, Central Street, Glasgow, which was afterwards transferred to Govan under the name of The Fairfield Shipbuilding and Engineering Co., where he remained for a period of six years. On completion of his apprenticeship, in 1873, he became connected with Messrs. Blair & Co., Stockton-on-Tees, for whom he acted as guarantee engineer for over ten years, obtaining his first-class Board of Trade certificate of competency at the early age of 23. He then left the sea and joined Mr. Michael Havelock, consulting engineer, Newcastle, as assistant, and shortly afterwards became connected with the firm of Messrs. Dixon Robson & Co., shipowners, Newcastle-upon-Tyne, as their marine Superintendent, which position he held up to the time of his death.

For the last twenty years he also acted as consulting engineer and naval architect to the firm of Messrs. Atkinson Brothers and Messrs. Dixon, Sample & Co., of the same city.

He joined this Institution as a member in 1885; he was also

a member of the Institution of Naval Architects, London, in the *Transactions* of which he always took a lively interest. He was a great supporter of religious and philanthropic work, and his readiness to assist others in any trouble or ailments gained for him the esteem and goodwill of all with whom he came in contact.

His sudden and unexpected death on the 28th March, 1905, at the Central Station, Newcastle, while returning from his duties, came as a great shock, not only to his relatives but also to a very large circle of business friends, by whom he was held in high esteem, not only on the North-East Coast and the Bristol Channel, but also in most of the large ports of England and Scotland.

MR. HENRY FOWNES.

Mr. Henry Fownes was born in Liverpool in the year 1848 and educated at Seaforth. On leaving school he was apprenticed to Messrs. W. H. Potter & Co., shipbuilders, Liverpool. On the completion of his apprenticeship he started business as a forge master, and about the year 1871, he erected the Sandon Forge, Sandhills, Liverpool. This not proving successful, he migrated to the Clyde, and was appointed by Messrs. Dobie & Co. to take charge of some special work. He did not remain long there, being in 1881 appointed manager and secretary to Messrs. The Tyne Forge

in failing health prior to its occurrence, on the 18th day of August, 1904. He was also chairman of Messrs. The Tyne and Blyth Steamship Co., Limited.

Mr. Fownes was always an enthusiastic member of this Institution. He took a lively interest in its formation in 1884, and at the second General Meeting, which was held in Sunderland on January 26th, 1885, he read a most instructive and practical paper on "The Forging of Crank Shafts in Iron and Steel." In 1893 he was elected a member of Council, and in 1896 he was appointed a vice-president of the Institution, which office he held up to the time of his decease. He sat on many of the sub-committees.

He was for many years a member of the Iron and Steel Institution, and in 1893 he was elected a member of the Institution of Naval Architects. He was well known in shipping circles, was a most energetic man of business, and was considered an expert in the forge trade. He was a kind-hearted and most genial companion and was much esteemed by a large circle of friends.

MR. WILLIAM JOHNSTONE.

Mr. William Johnstone was a Clydesdale man by birth and descent, and related to several of the pioneers of steam navigation on that river.

He served his apprenticeship to shipbuilding under Messrs. Thos. Seath & Co., Rutherglen. He was afterwards engaged as draughtsman by Messrs. A. and J. Inglis, Pointhouse, Glasgow, and subsequently he joined Messrs. Oswald Mordaunt & Co., Southampton, as chief draughtsman.

In 1883 he entered the service of the Society of Lloyd's Register of British and Foreign Shipping, being appointed shortly after as surveyor at Sunderland, and in succession at Glasgow, London, Barrow-in-Furness and again at Sunderland, from which port he was, in 1900, appointed principal surveyor at Greenock, and held that position up to the time of his death, which took place, after a wasting illness, on the 21st of May,

1904. He was one of the original members of this Institution, being associated with it since its formation in November, 1884. He was greatly respected for his professional skill and genial disposition.

MR. JAMES LARKIN.

At the age of 15 Mr. JAMES LARKIN entered the engineering works of Messrs. Black, Hawthorn & Co., Gateshead, as a premium apprentice, where he received a thorough training. When about 22 years old he was elected teacher of engineering to the South Shields Science and Art Classes, then under the Corporation, which appointment he held for a number of years, until pressure of business caused him to relinquish them. About this time he received an appointment as chief engineer at the St. Bede's Chemical Works, East Jarrow. In connection with this situation he travelled a great deal both in Europe and America and discharged his duties to the entire satisfaction of the Company. When the chemical trade in the district declined, he obtained a situation under Mr. John F. C. Snell, electrical engineer to the Sunderland Corporation, and soon was promoted to the position of chief draughtsman, which situation he held up to the time of his death, which occurred, after a few days' illness, on the 27th of October, 1904. He was a member of the Institution since its formation in November, 1884.

He then returned to Messrs. R. and W. Hawthorn, Leslie & Co.'s establishment and worked under his father, who was managing director of the St. Peter's Works. In 1897 Mr. F. C. Marshall retired and his son succeeded him as managing director; this position he held up to the time of his death, which took place on February 10th, 1905, in the 39th year of his age. Being a man well versed in the theoretical knowledge of his profession and having undergone a thorough practical training, he was most brilliantly successful as an engineer and displayed admirable judgment in all business affairs. He was extremely popular and gained the esteem and confidence of all with whom he came in contact. Like his father, he took great interest in the training of the young men who were under him and was highly respected by his officials.

In 1885 Mr. F. T. Marshall joined this Institution as a Graduate member, and in 1888 was raised to the Members' section. In 1889, and during the Presidency of his father, the Graduate members constituted themselves into a Graduate Section of the Institution for the purpose of reading and discussing papers amongst themselves, and he was appointed the first chairman of the Section. He was also a member of the Institution of Civil Engineers and of the Institution of Naval Architects. When the latter Institution paid a visit to Newcastle-upon-Tyne in the summer of 1899, he read a paper on "The Boiler Arrangements of Cruisers."

He was also one of the founders and chairman of the Northern Scientific Club, in which he took considerable interest.

MR. JOSEPH NODDER.

Mr. Joseph Nodder was a native of London and started life in an engineering works on the River Thames. He migrated to Sheffield about the year 1872 and obtained employment as foreman under the late Mr. George Leysell, who was at that time manager of the armour-plate finishing and planing department at Messrs. John Brown & Co's., Limited, Atlas Works. He was promoted to the managership of the boiler-furnace department about 1888, which position he held till his decease. He

travelled much for the firm, chiefly in America and Russia. He was well known to the marine engineers of the North-East Coast. He became a member of this Institution in 1893 and was greatly interested in its affairs. In November, 1893, he read before the Institution a very able paper on "The Dangerous Working Heat of Mild Steel and the Effect of Annealing and Air Cooling," for which he was highly commended. About two years previous to his death he broke down in health, and in the beginning of August, 1904, he left England for Canada, with the hope that the trip might prove beneficial, and also to pay a visit to his father, who resides in Toronto. He died at Whitby, Ontario, Canada, on August 23rd, 1904, aged 53 years. In his profession he was looked up to as an authority, and his kind and genial manner gained for him many friends.

MR. ALFRED AUSTIN RICKABY.

Mr. Rickaby commenced his career as a miller and wheelwright in a large flour mill in the Darlington district. When about 16 years of age he removed to Sunderland, and went to serve under Mr. Joseph Pile, marine engine builder, Monkwearmouth, finishing his apprenticeship with Mr. George Clark, Southwick. At the age of 21 he took charge of laying down the shipbuilding plant for Mr. William Pile, North Sands, Monkwearmouth, sub-

The next undertaking in connection with Mr. William Pile was the laying down and erection of a complete marine engineering plant, including machine shop, erecting shop, shop for making marine boilers, also metal and brass foundry department, and coppersmith's shop. Mr. Rickaby was the first to send a vessel to sea from Sunderland with compound engines working at a pressure of 75 lbs. per square inch.

Upon the death of Mr. William Pile, Mr. Rickaby commenced business on his own account and erected the Bloomfield Engine Works, in which he succeeded in establishing a world-wide business connection. He was also well represented in the ranks of patentees, having some sixteen patents standing to his name. One of the first of these to demand attention was Rickaby's patent apparatus for cooling and purifying water in jet condensing engines, whereby it becomes impossible for impurities that may happen to be either suspended or in solution in the water, to interfere with the working of the engine. The following may also be mentioned:—Cylinder drain valves for automatically draining the condensed water from cylinders without loss of steam, an invaluable invention for engines that are served at a distance from their boiler, preventing such accidents as broken cylinders, etc., by clearing the water from the cylinder at the moment of putting steam on. A slotting machine relieving tool holder; improved Ramsbottom ring piston packing: metalline bushes for bearings, requiring no lubricant; and mast caps.

He was elected a member of this Institution in 1888. He was also a member of the Institution of Mechanical Engineers and a member of the Foremen Engineers' and Draughtsmen's Association. He died on the 22nd November, 1904, in the 65th year of his age.

MR. THOMAS THORMAN.

Mr. Thomas Thorman was the son of the late Dr. Thomas Thorman, an eminent London physician. He was born in London on 29th August, 1867, at 17, Oxford Terrace, Hyde Park, and was educated there, afterwards completing his education at the Physiological College, Marylebone Road. After that time

APPENDIX.

'ALOGUE OF PAPERS READ BEFORE THE NORTH-EAST COAST INSTITUTION OF ENGINEERS AND SHIPBUILDERS.

VOLS. I.–XXI., 1884-1905.

NAME OF AUTHOR.	TITLE OF PAPER.	PAGE.
	VOL. I.—1884-85.	
loyd (President) ...	Inaugural Address	3
V. H. White, K.C.B., L.D., F.R.S. ...	The Speed Trials of Steamships	21
y Fownes	On the Forging of Crank Shafts in Iron and Steel...	37
. Long	Approximate Curves of Stability for Ships ...	53
. Rowe	Boiler Construction and Preservation	73
aylor	Triple Expansion Engines	107
inclair	Twisting Moments on Crank Shafts of Different Engines	131
	VOL. II.—1885-86.	
loyd (President) ...	Inaugural Address	7
ameron	On the Manufacture of Large Forgings for Marine Purposes	35
avor and T. Millar ...	On some Considerations regarding the Freeboard of Merchant Ships	59
. Tweddell	Application of Hydraulic Pressure to the Driving Machines	91
llstrom	Construction and Fittings of Salvage Steamers ...	131
. James	Stiffening of Collision Bulkheads	157
Patterson and M. andison	Forced Draught	175
Long and W. E. Paton	Points of Interest in the Designing of Racing Yachts	217
Marshall and R. L. 'eighton	High Speed Engines	287
	VOL. III.—1886-87.	
V. T. Doxford, M.P. President)	Inaugural Address	9
Nichol and J. Gravell	Use and Transport of Liquid Fuel	27
udd	Plan and Construction of Marine Engine Works ...	55
oster	"Principle of Work" in relation to the Strength of Structures, and the Fallacy of the "Accepted Theory of the Strength of Hollow Shafting" ...	77
. Gannaway	Some Notes on the Launching of Vessels	149
avor	Technical Education for Engineers and Shipbuilders	167
lenchynden	Reaction and Efficiency of the Screw Propeller ...	179
'Hall...	On Compound *v.* Triple Expansion Engines, from a Shipowner's Point of View	229

Name of Author.	Title of Paper.	Page.
J. T. Nicolson	The Strength of Short Flat-ended Cylindrica Boilers	205
J. C. Spence	Results of Experiments on the Strength of Boilers	219
W. C. Mountain	Electrical Engineering, with Special Reference to Electric Lighting	269
W. Hök	The Unsinkability of Cargo-carrying Vessels (second paper)	335
H. Gray	Water Gauge Fittings for Steam Boilers	373
J. Petrie	The Basis of Ship's Scantlings	393
	VOL. VIII.—1891-92.	
E. F. Wailes	Proposed Improvements in the Construction of the Bottoms of Ships and Steamers	19
J. F. Walliker	Pumping arrangements, etc., for steam Vessels ...	35
J. J. Campbell	Engines for Ships of War	69
M. C. James	On Tonnage Measurements	105
E. F. Wailes	The Careening of Ships and Steamers for the Purpose of Practically Testing their Stability ...	141
J. B. Edmiston	The Rapid Filtration of Feed Water	169
S. B. Tritton	River Steamers for Indian Railways	209
G. Bergström	Proposed New Type of Cargo Steamer	231
R. Hirst	On the Design and Fitting of Stern Tubes, Stern Bushes, and Propeller Shaft Liners	259
	VOL. IX.—1892-93.	
R. Thompson (President)	Inaugural Address	11
J. R. Fothergill	The Combustion of Coal and Prevention of Smoke	43
J. D. Young	A System of Mechanical Aid to the Investigation of Speed Curves	71
D. B. Morison	Marine Boiler Furnaces	109
W. R. Cummins	Apparatus for Determining the Amount of Water Suspended in Steam	233
L. Newitt	Ship's Electrical Fittings for Lighting, Signalling, Telegraphing, and for Motive Power	249
J. G. Jordan and R. Marlborough	Types and Proportions of Mercantile Steamers in Relation to Cost, Carrying Capacity, and Speed	275
S. O. Kendall	Strains of Tank Steamers	327
	VOL. X.—1893-94.	
W. Hök	On a Method of Comparing Steamship Performances and of Estimating Powers and Speeds of Ships	21
J. Nodder	The Dangerous Working Heat of Mild Steel, and the Effect of Annealing and Air Cooling ...	67
F. Caws	On Certain Principles of Motion as Taught by the Pendulum, and as Illustrated by the Resistance of Ships and Other Bodies Moving Through Fluids	103
J. R. Fothergill	Mercantile Marine Engineers	149
W. Bell	On a New System of Construction for Vessels of Cellular Type	219
W. Stafford	Oil Engines	257
A. Liddell	Bases for Classification of Vessels Proportioned to their Strength to Resist Bending and Vibration	287

Name of Author.	Title of Paper.	Page.
	VOL. XI.—1894-95.	
Alderman Sir T. Richardson, B.A. (President)	Inaugural Address	13
A. Young	A Brief Outline of the Theory of the Rolling of Ships	57
F. Caws	An Account of Some Experimental Studies of Ship Acceleration and Fluid Resistance ...	91
W. C. Mountain	The Design and Efficiency of Plant for the Transmission of Power by Electricity	113
H. Foster	On the Application of the Electric Arc to Machinery and Boiler Repairs, etc.	165
S. O. Kendall	On Turret-deck Cargo Steamers	209
G. H. Baines	The Metric System of Weights and Measures ...	281
	VOL. XII.—1895-96.	
W. Cross	The Surface Condensing Plant at the Newcastle and District Company's Electric Light Works, Forth Banks, Newcastle-upon-Tyne	21
J. Denholm Young ...	The Application of the Law of Similarity to Marine Propellers	31
G. H. Baines	Report on the Metric System	51
J. M. Allan	Investigation into the Forces Tending to Produce Vibration in High Speed Engines	59
R. H. Muir	Countersinking in the Shipyard	93
M. C. James	Some Structural Details of Modern Ships	111
R. M. Ferrier	The Determination of the Forces which Produce Vibrations with Three-crank Engines at High Speeds	141
A. E. Doxford	Balancing High Speed Engines	149
	Report of the Representatives of Lloyds' Technical Sub-Committee	179
J. F. Walliker	The Maintenance and Repairs of Marine Boilers ..	
J. R. Fothergill	Marine Boilers, particularly in Reference to Efficiency of Combustion and Higher Steam Pressures	223 235
	VOL. XIII.—1896-97.	

Name of Author.	Title of Paper.	Page.
T. Messenger	An Instrument for Gauging the Circularity of Boiler Furnaces, etc.	155
A. E. Long, M.A. ...	Some Points of Interest in the Designing of Cargo Steamers	173
James Andrews	Cylinder Ratios	199
A. L. Mellanby	The Effects of different arrangements of Crank Angles upon the Economy of Quadruple Expansion Engines	227
G. Dykes	A Reliable Method of obtaining the necessary Displacement and Centre of Buoyancy of Ships	237
	VOL. XV. 1898-99.	
Sir B. C. Brown, D.C.L....	President's Address	13
M. W. Aisbitt	Some Features of the Repairs and Construction of Iron and Steel Ships	31
T. Messenger	An Improved Method of Strengthening Copper Steam Pipes	67
Tom Westgarth	On Works Organisation	87
E. C. Chaston	On the Manufacture of Shafting for Screw Steamers	149
F. Caws	The Increasing Frequency of Failure of Propeller Shafts	161
W. E. Cowens	Shop and General Establishment Charges in Engineering Works	221
	VOL. XVI. 1899-1900.	
F. W. Jennings	The Working Stress of Materials used in British Locomotive Construction	17
C. H. Innes, M.A. ...	Screw Fans	43
R. L. Weighton, M.A. ..	Receiver Drop in Multiple Expansion Engines ...	63
S. J. P. Thearle	The Distribution of Material in the Upper Works of Large Steamers	89
W. C. Borrowman, Wh. Sc.	Some Considerations affecting the Training of Young Engineers	113
W. H. Atherton, B.Sc. ...	The Fouling of Ships	161
D. B. Morison	The British Naval Engineer	183
	VOL. XVII.—1900-1901.	
H. Withy	President's Address	17
C. H. Innes, M.A. ..	Stress produced in a Connecting Rod by its Motion	27
E. L. Orde	Liquid Fuel	41
F. W. Jennings	The Ventilating and Heating of Ships by a Forced Circulation of Warm Air	73
G. M. Brown, B.A., B.Sc.	Some attempts to increase the Efficiency of Marine Boilers	99
Walter Scott	Some Remarks on the Commercial Organisation of Shipyards	129
Edwin Griffith, Wh. Sch.	Water Tube Boilers	157
James M. Thornton ...	A Simple Method of Preventing the Corrosion of Tail Shafts	217

Name of Author.	Title of Paper.	Page.
	VOL. XVIII.—1901-1902.	
H. Withy	President's Opening Remarks	17
J. W. E. Littledale ...	The Speed of Machine Shop Tools	21
E. C. Chaston	The Ballasting of Modern Tramp Steamers ...	51
F. G. Warburton ...	Some Notes on Steam Turbines	71
D. B. Morison	The Present Unsatisfactory Condition of the Engineering Branch of H.M. Navy	95
M. C. James	On Passenger Accommodation in Steamships ...	239
George Parker	Workshop Records	275
R. P. Link	Co-operation and Mechanical Aids to Workshop Cost-keeping	311
	VOL. XIX.—1902-1903.	
John Tweedy	Presidential Address	13
John H. Heck	Fire Extinguishing Apparatus for Ships	33
J. Hamilton Gibson ...	On Large Stop-valves for High Pressure Steam ...	61
Joseph H. Pescod ...	Minimum Metacentric Heights in Small Vessels ...	107
J. Denholm Young ...	Loss of Power in Steamship Vibrations	131
F. H. Alexander ...	A Displacement Table for Use with the Tchebycheff Formula	155
Archibald Hogg	Some Points in the Construction of Large Steel Steamers and the Riveting of Lapped Butts ..	185
John Tweedy	Education in Technical Science and General Training of Youths	219
	VOL. XX.—1903-1904.	
John Tweedy	President's Opening Remarks	15
Max Wurl	Technical Education in Germany	17
	Report of Education Committee	55
John H. Heck	Notes on the Construction of Stability Cross Curves from Balanced Paper Sections	97
B. C. Laws	Technical Education, in which Special Reference is made to the Admiralty System	121
F. H. Alexander	Longitudinal Engine-room Bulkheads in Merchant Vessels in Relation to Transverse Stability when Bilged	159

To illustrate Mr. W. R. Cummins' Paper on "Vertical & Horizontal Tubes in Water Tube Boilers."

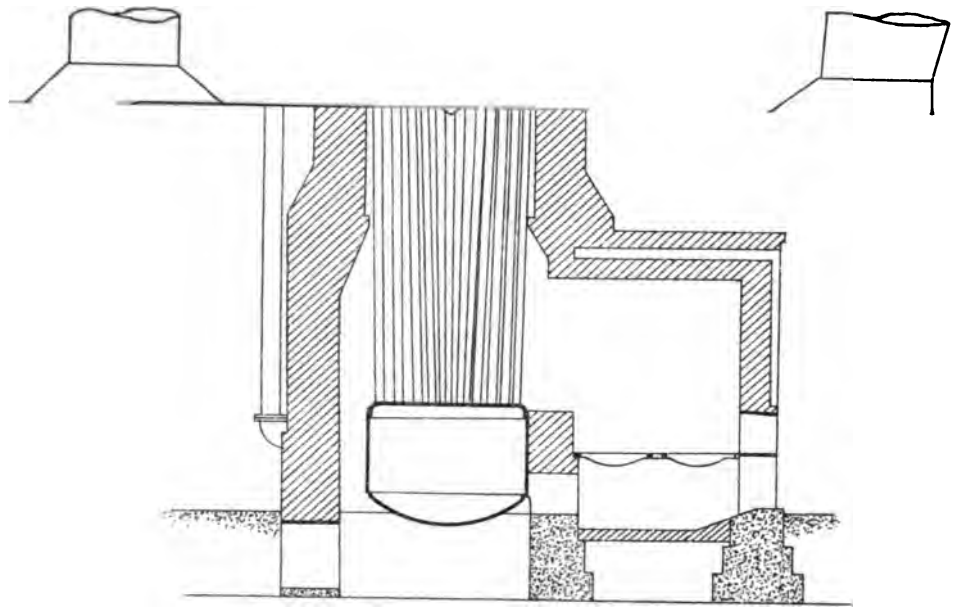

CAHALL BOILER.

Proceedings N.E.C.I. of E. & S. 1904-1905
Session XXI.

And.w Reid & Comp.y L.td Newcastle upon Tyne.

U of M

"Water Tube Boilers."

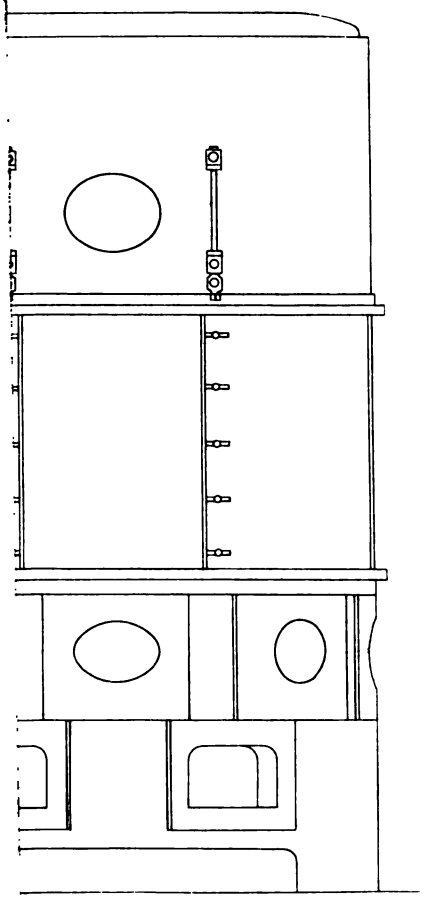

BOILER.

"Water Tube Boilers."

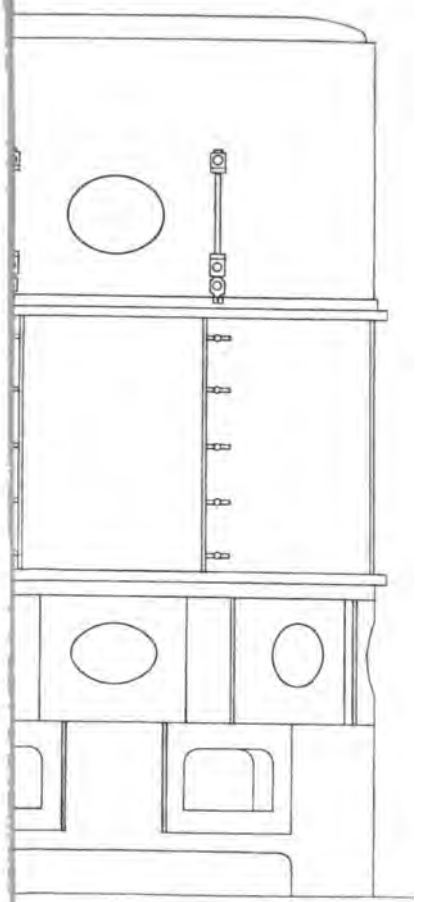

BOILER.

To illustrate Mr. Frank Little's Paper on "Petrol Motor Cars."

FIG. 1.—THE ROTARY FORCE PUMP.

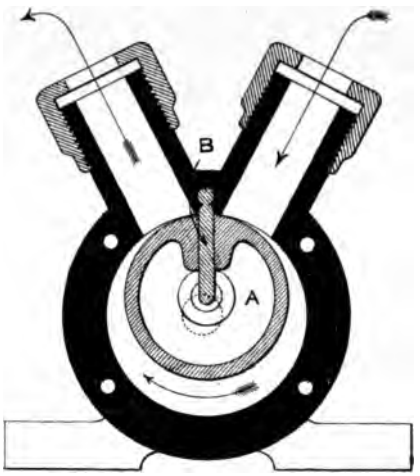

A. ROTARY DISC.
B. SPRING VANE.

FIG. 2.—THE GEAR TYPE OF PUMP AND A GOOD FORM OF CONNECTION.

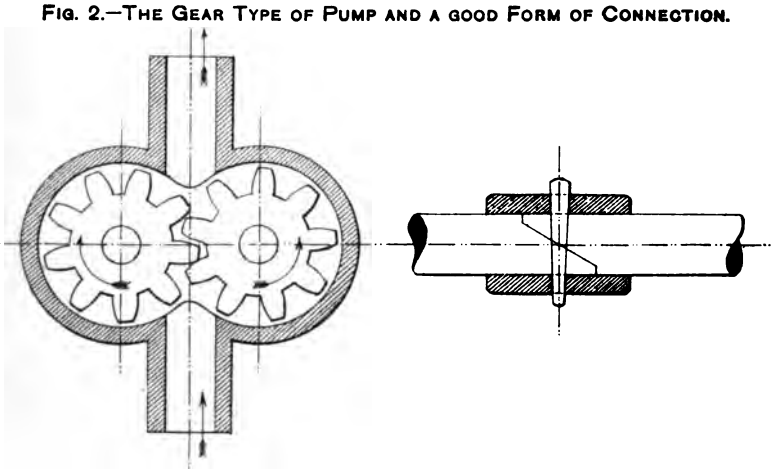

FIG. 3.—THE CENTRIFUGAL PUMP.

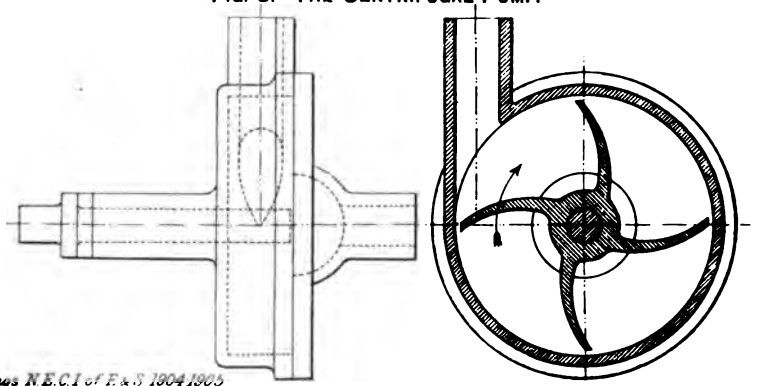

And.w Reid & Comp.y L.td Newcastle upon Tyne.

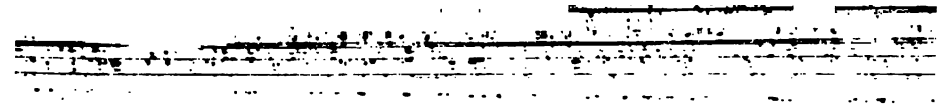

SECTION OF FOX'S FURNACE IN TESTING APPARATUS.

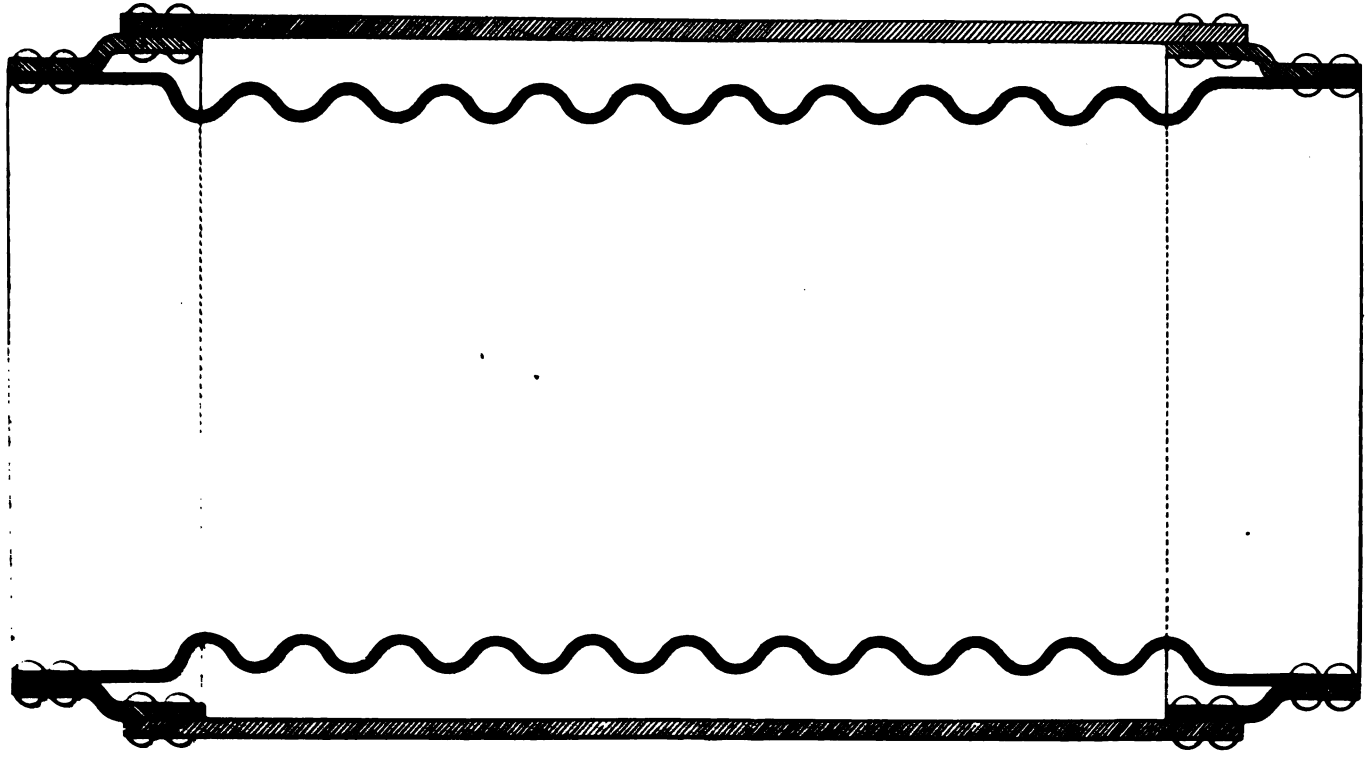

And^w Reid & Comp^y L^td Newcastle upon Tyne

FIG. 4.—A COIL CLUTCH.

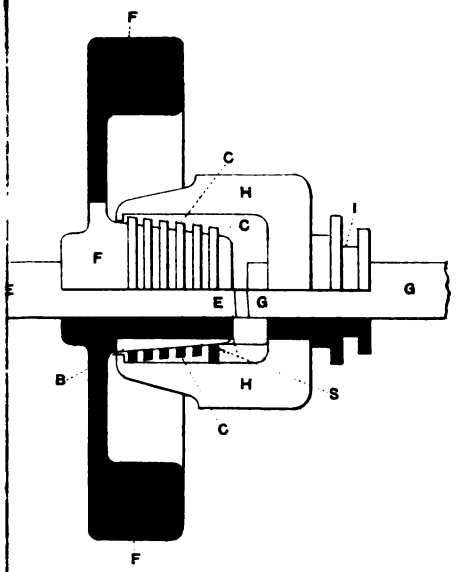

REFERENCE.

E.	ENGINE SHAFT.
G.	GEAR-BOX SHAFT.
F F.	FLY-WHEEL.
B.	HARD STEEL BUSH.
C C C.	GRIPPING SPRING COIL.
H H.	CLAW FORK DISENGAGING COIL.
I.	ACTUATING FORK GROOVE.
S.	ATTACHMENT OF COIL TO H AND GEAR-BOX SHAFT.

And.w Reid & Comp.y L.td Newcastle upon Tyne.

Showing Panhard Type of Gear on Rover Car, also Metal-to-Metal Floating Plate-clutch Running in Oil.

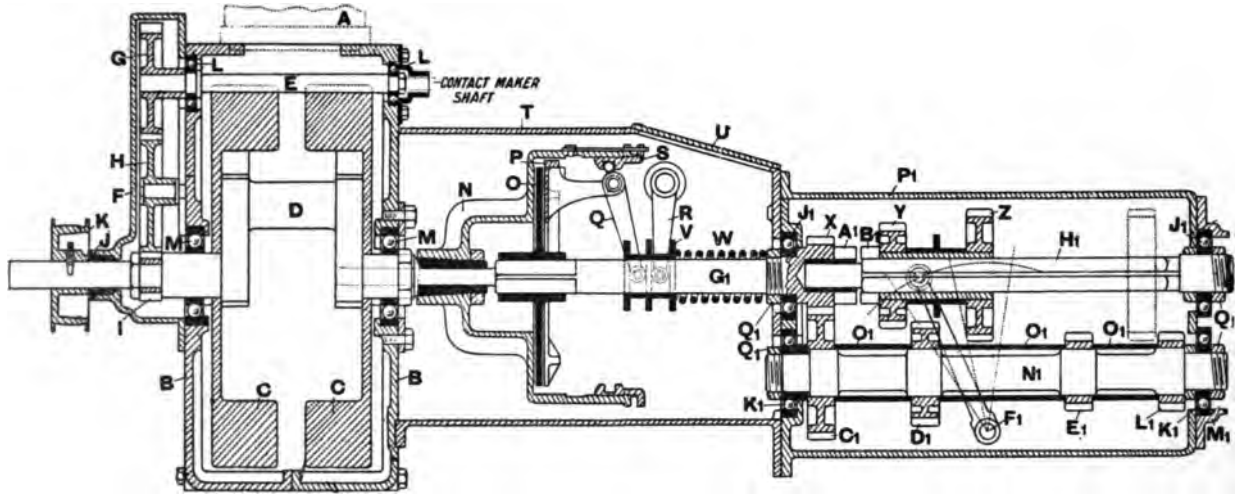

A, position of cylinder body.
A1, jaws of clutch on gear wheel X.
B B, crank case.
B1, jaws of clutch on gear wheel Y.
C C, flywheels secured to crank D.
C1, constant wheel meshing with wheel X.
D, engine crank.
D1, countershaft second speed wheel.
E, camshaft.
E1, countershaft first speed wheel.
F, cover for distributing wheels I, H, G.
F1, shaft carrying gear striking lever.
G, camshaft gear wheel.
G1, main driving shaft from clutch.
H, intermediate distributing wheel.
H1, squared mainshaft.
I, crankshaft distributing wheel.
J, stuffing gland to prevent oil escape.
J1 J1, ball races for mainshaft.
K, fan driving pulley.
K1 K1, ball races for countershaft.
L L, ball races for camshaft.
L1, reverse pinion.
M M, ball races for engine crankshaft.
M1, case for exhaust box and propeller-shaft.
N, bell clutch secured to crank axle D.
N1, countershaft carrying gear wheels C1, D1, E1, L1.
O, cast iron clutch disc.
O1 O1. O1, sleeves for distance pieces between pinions C1, D1, E1, L1.
P, clutch ring carrying levers Q.
P1, aluminium gear case.
Q, levers to apply action of clutch spring W to disc P, O, and N.
Q1 Q1 Q1, locking nuts for ball races.
R, lever worked by foot lever shaft to release clutch.
S, adjusting ring for clutch lever fulcrums.
T, aluminium clutch casing.
U, inspection door for clutch case.
V, clutch operating sleeve.
W, clutch spring.
X, constant mesh pinion driven by G1.
Y, second speed spur wheel on squared sleeve.
Z, first speed spur wheel on squared sleeve.

And.w Reid & Comp.y L.td Newcastle upon Tyne.

Fig. 1.—Gear Box showing Foot Plate Attachment.

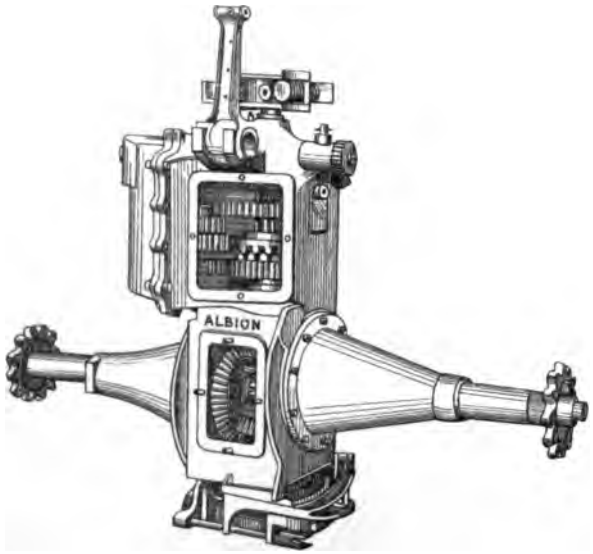

Fig. 2.—Foot Brake in Actual Practice.

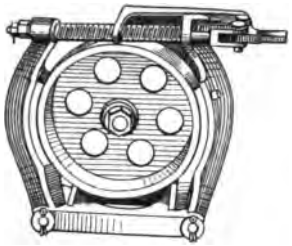

Fig. 3.—Change Speed and Brake Levers.

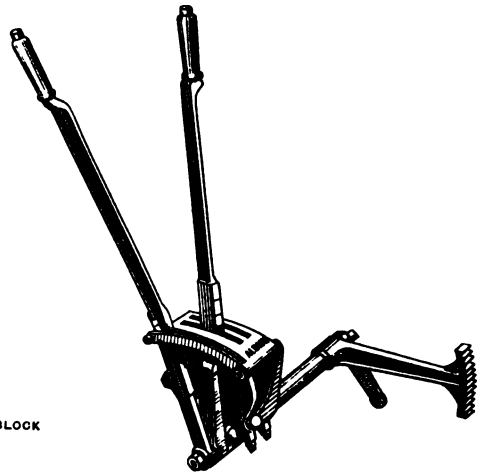

Fig. 4.—Double-acting Brake,

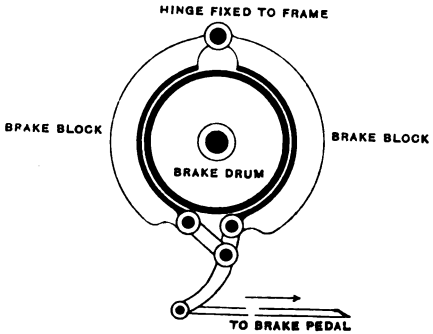

Proceedings N E C.I of E & S 1904-1905
Session XXI

And.w Reid & Comp.y L.td Newcastle upon Tyne.

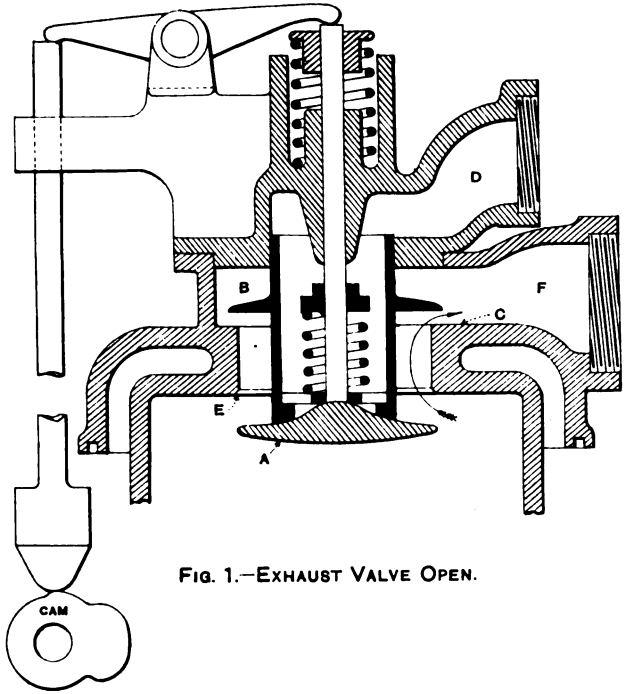

FIG. 1.—EXHAUST VALVE OPEN.

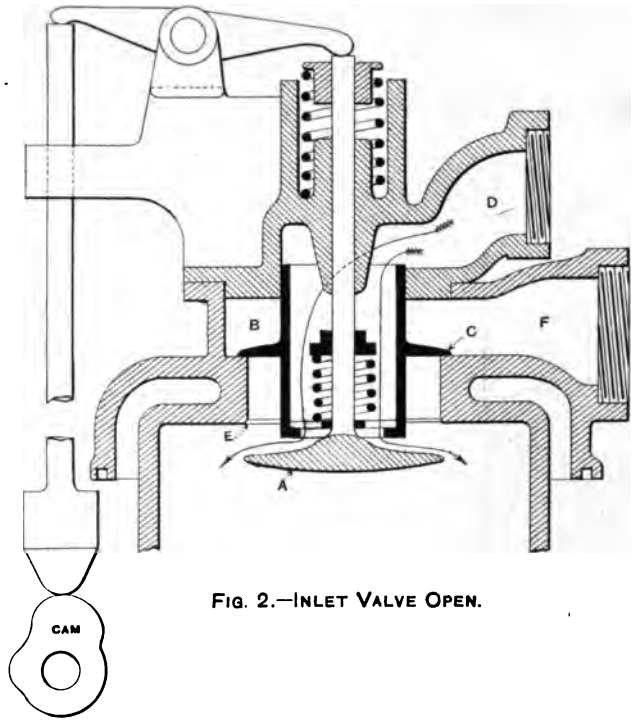

FIG. 2.—INLET VALVE OPEN.

REFERENCE.

A. MUSHROOM HEADED VALVE WITH TWO SEATS.
B. SLEEVE SURROUNDING A CARRYING A FLANGE.
C. SEAT UPO WHICH THE FLANGE B RESTS.
D. INTAKE FROM CARBURETTER.
E. VALVE SEAT FOR A.
F. EXHAUST PORT.

eedings N.E.C.I of E.&S. 1904-1905
ssion XXI.

And^w Reid & Comp^y L^td Newcastle upon Tyne

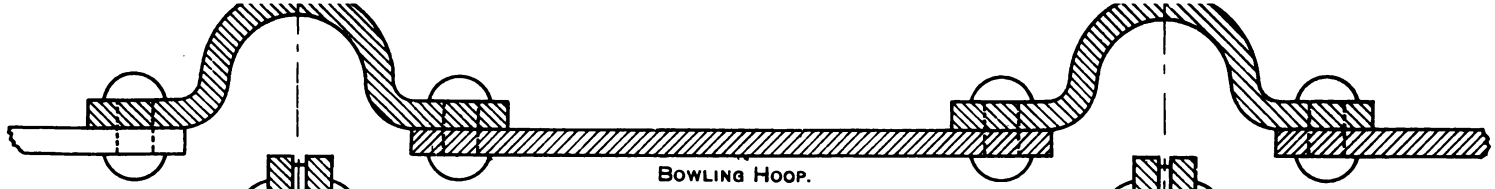

BOWLING HOOP.
FIG. 1.

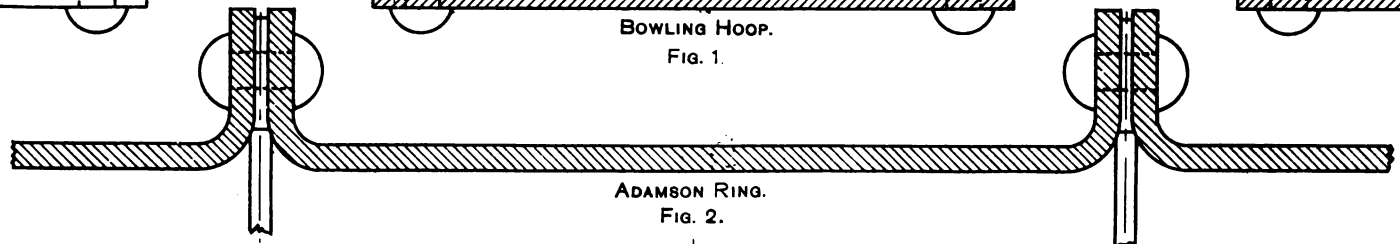

ADAMSON RING.
FIG. 2.

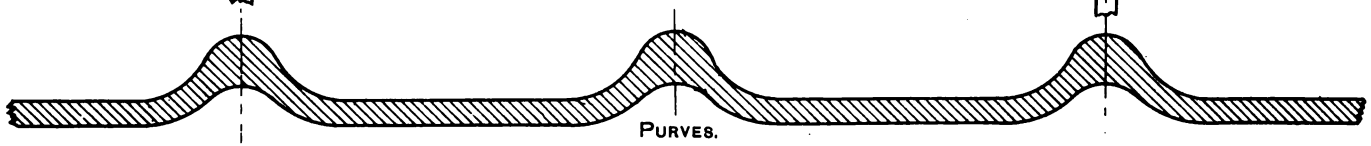

PURVES.
FIG. 3.

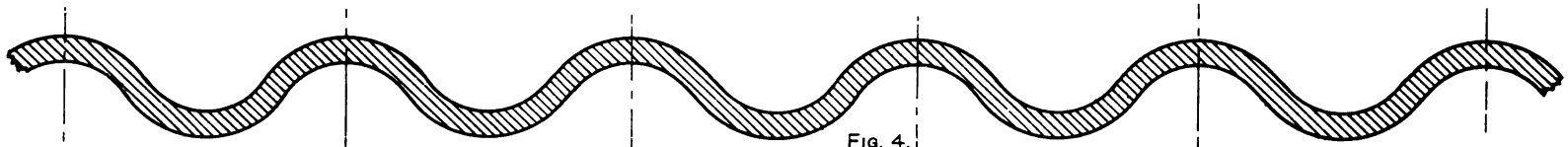

FOX.
FIG. 4.

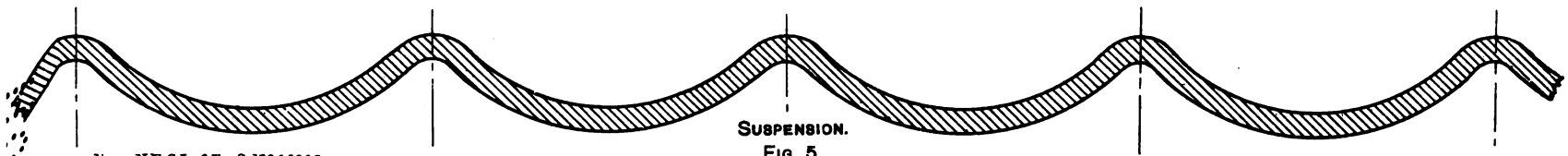

SUSPENSION.
FIG. 5.

Proceedings N.E.C.I. of E & S 1904-1905
Session XXI

Andw. Reid & Compy L.d Newcastle upon Tyne

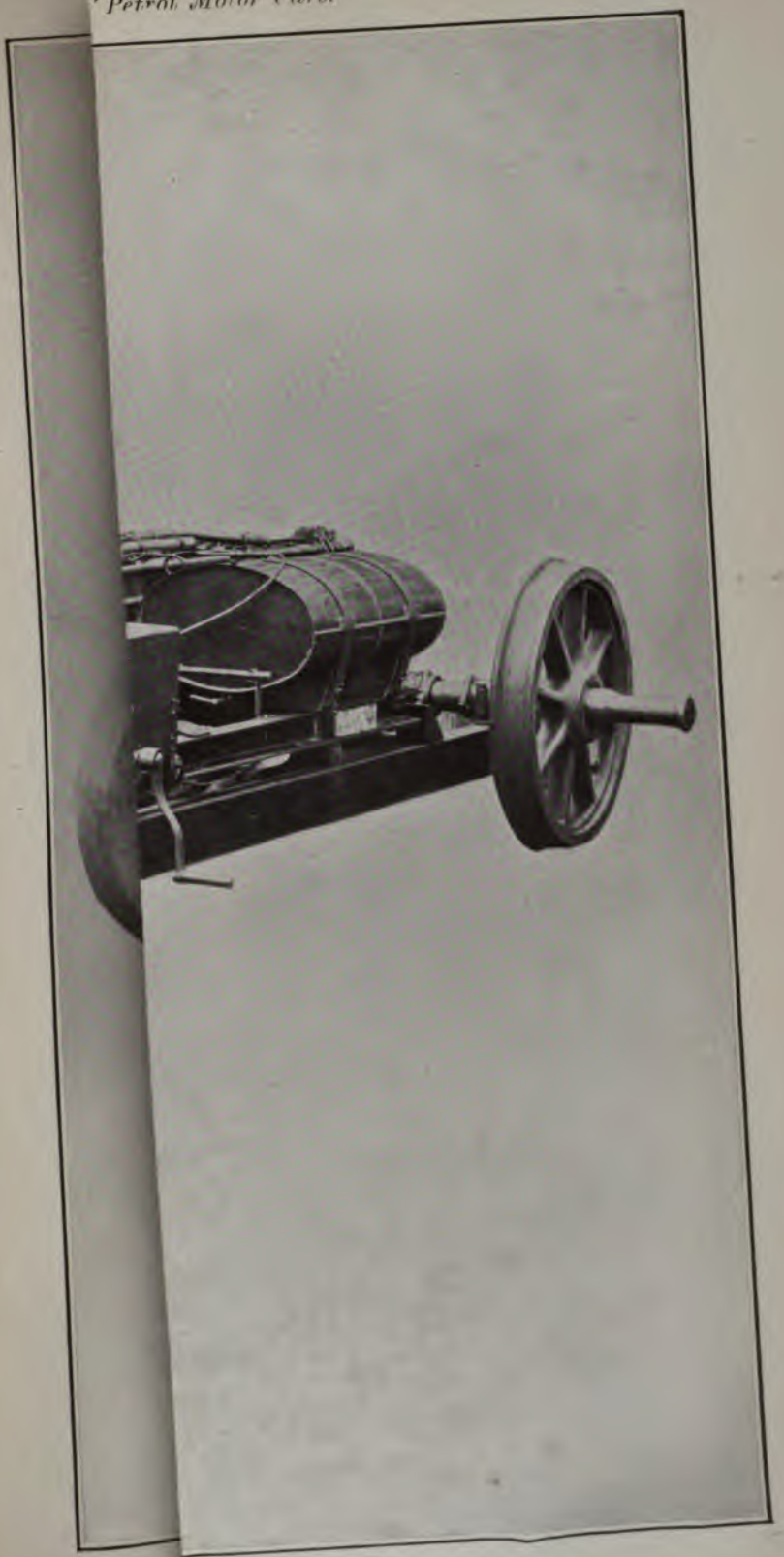

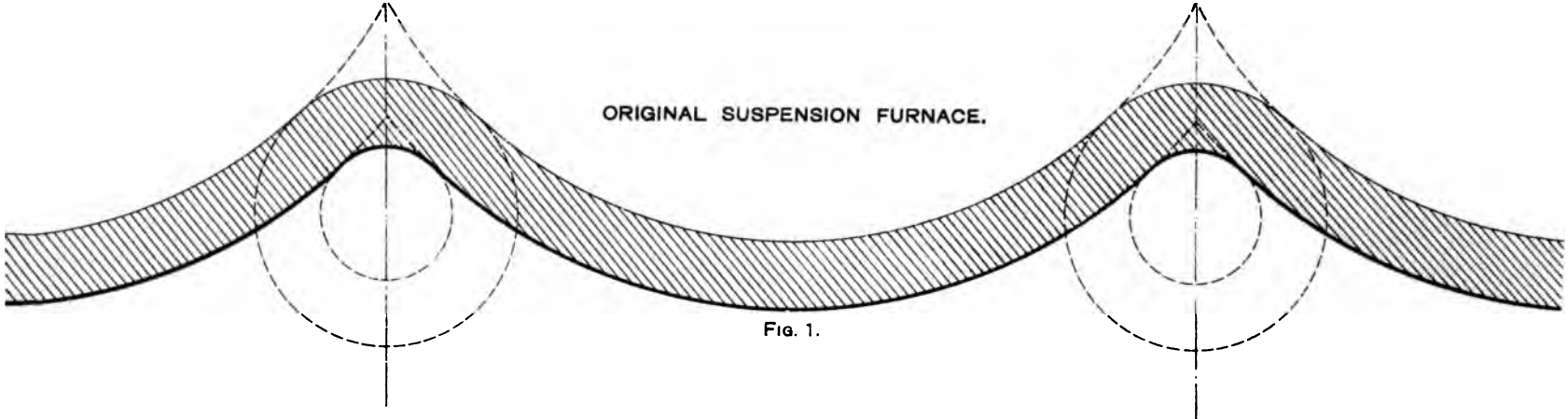

FIG. 1.

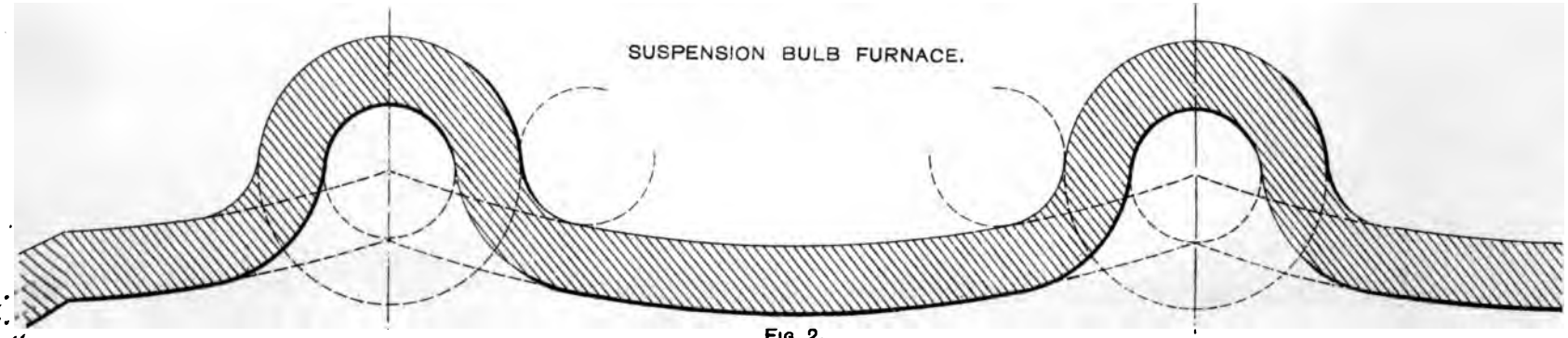

FIG. 2.

Proceedings N.E.C.I. of E. & S. 1904-1905.
Session XXI.

And.w Reid & Comp.y L.td Newcastle upon Tyne.

Illustrate Mr. J. F. C. Snell's Paper on "Application of Electricity to Industrial Purposes."

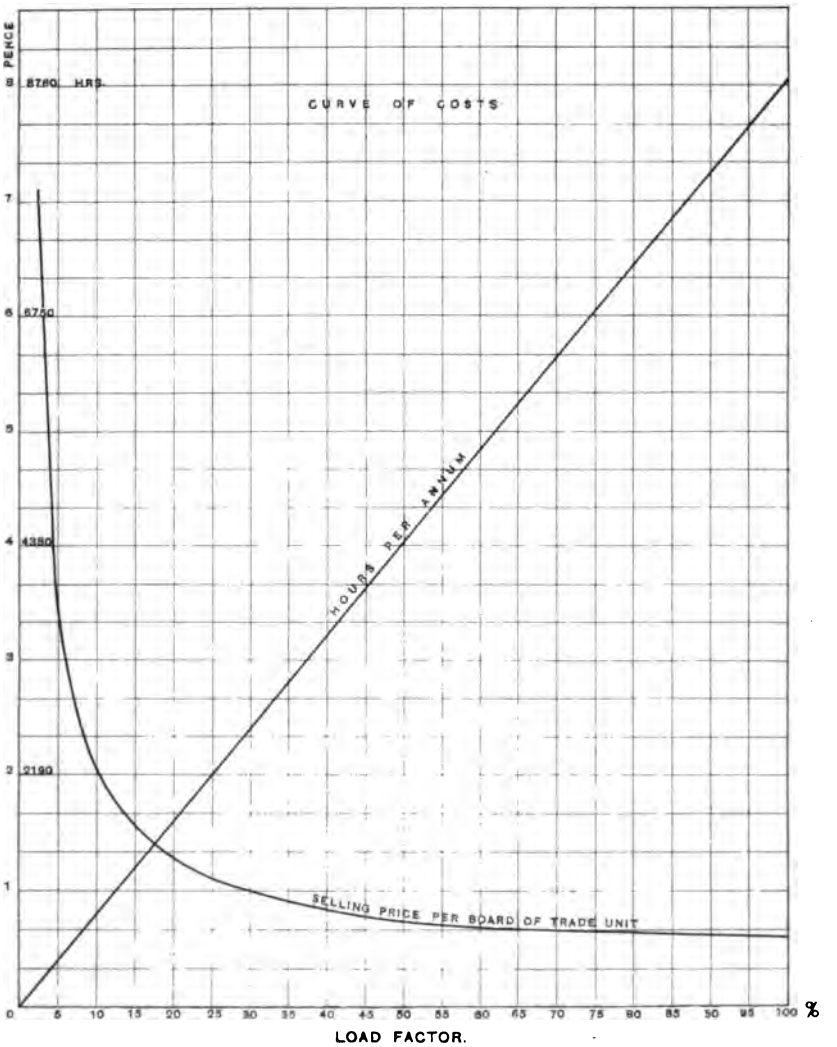

And. Reid & Comp. Ltd. Newcastle upon Tyne

To illustrate Mr. J. F. C. Snell's Paper on "Application of Electricity to Industrial Purposes."

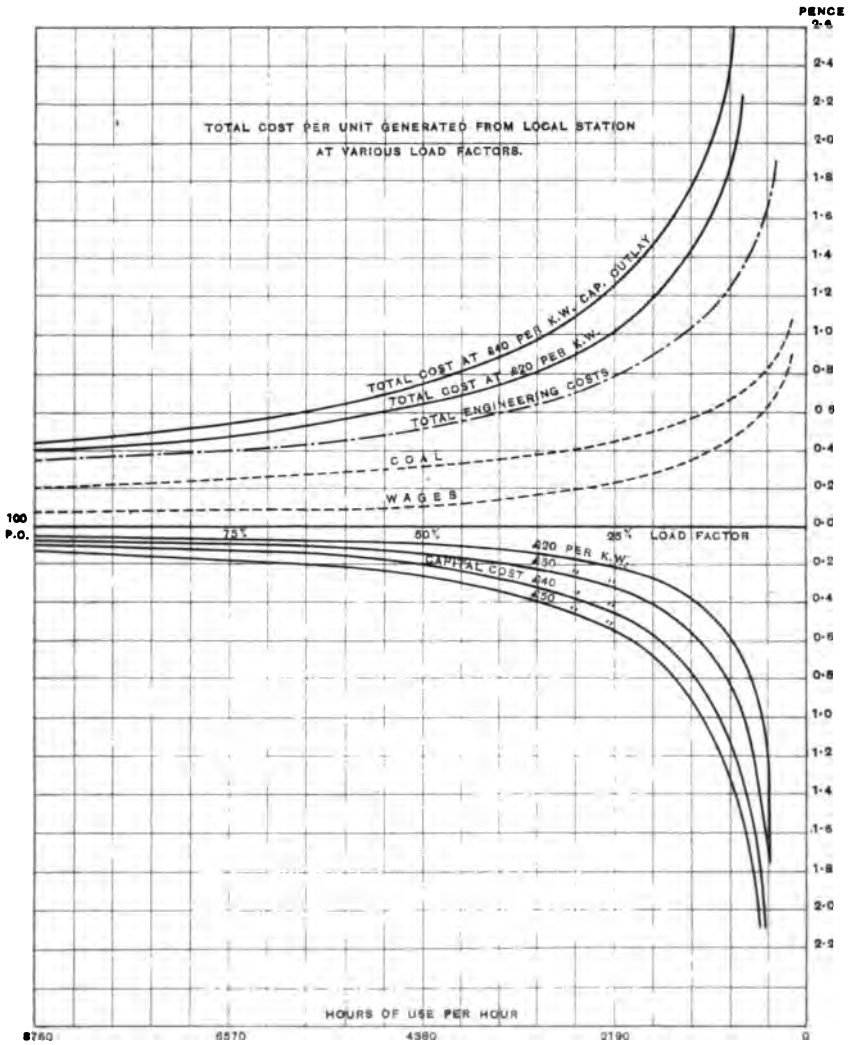

And^w Reid & Comp^y L^td Newcastle-on-Tyne

SECTION OF FOX'S FURNACE IN TESTING APPARATUS.

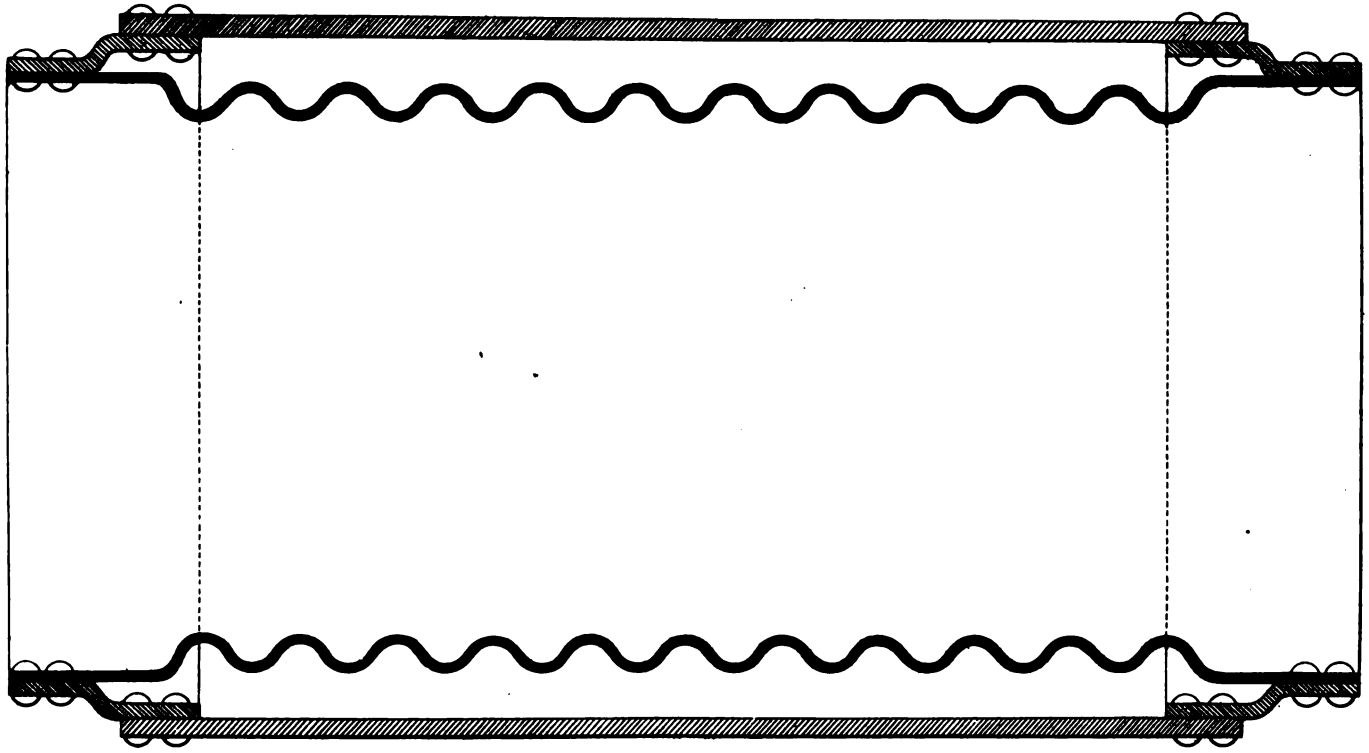

And.ᵐ Reid & Comp.ʸ L.ᵗᵈ Newcastle upon Tyne.

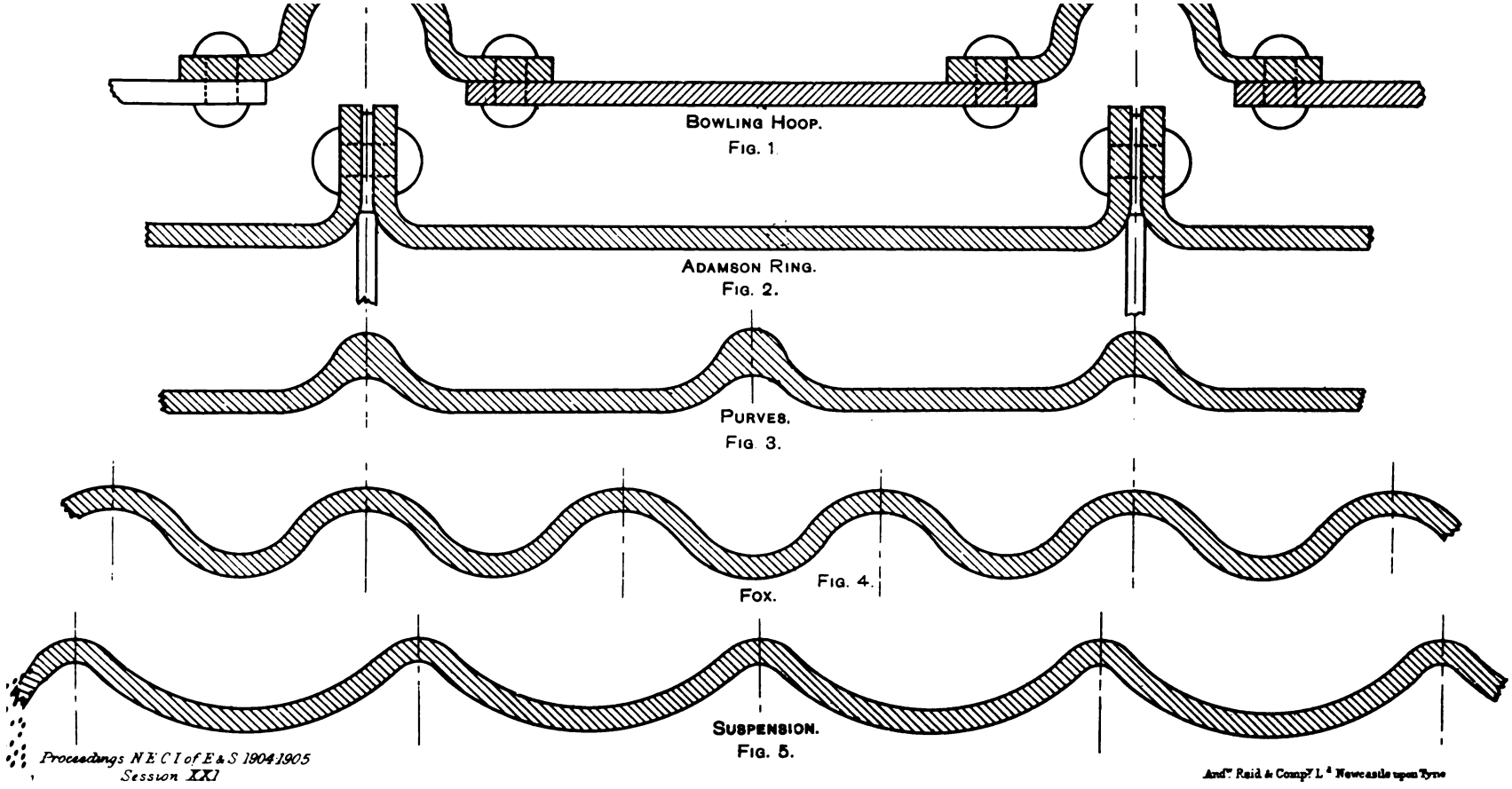
Bowling Hoop.
Fig. 1.
Adamson Ring.
Fig. 2.
Purves.
Fig. 3.
Fox.
Fig. 4.
Suspension.
Fig. 5.
Proceedings N E C I of E & S 1904 1905
Session XXI
And^w Reid & Comp^y Ld Newcastle upon Tyne

To illustrate Mr. D. B. Morison's Paper on "Boiler Furnaces and the effect of Oily Deposit on their Ultimate Strength."

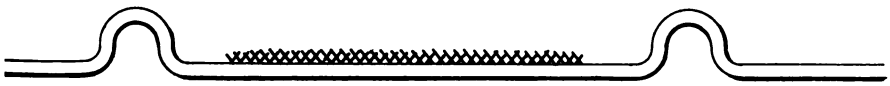

FIG. 1.

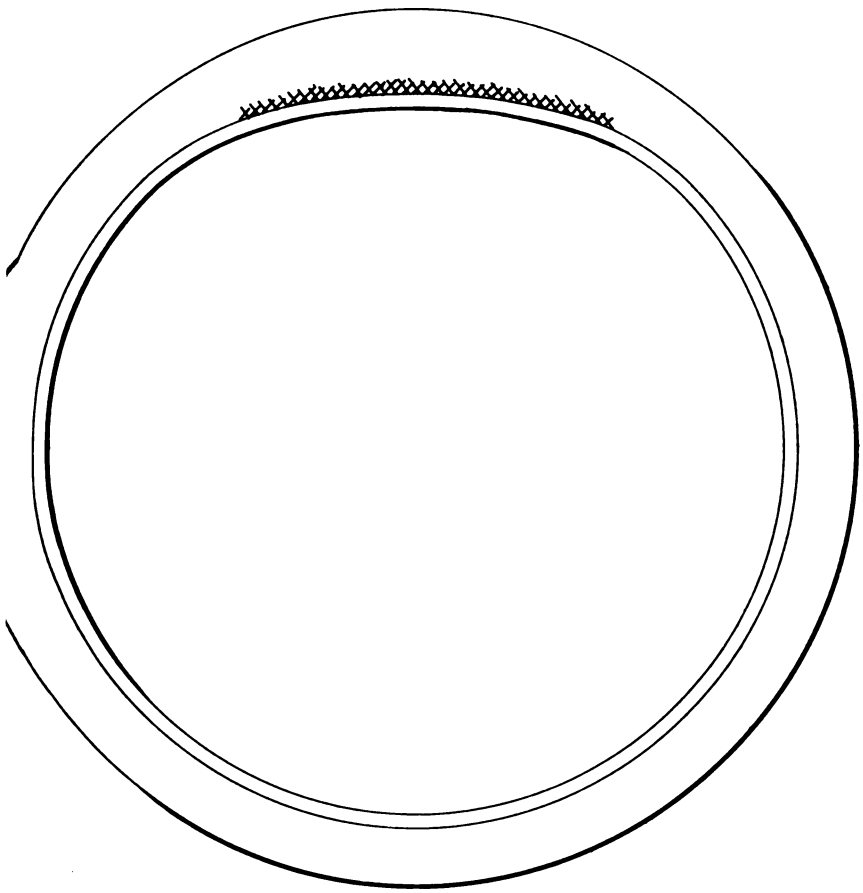

FIG. 2.

And.w Reid & Comp.y L.td Newcastle upon Tyne

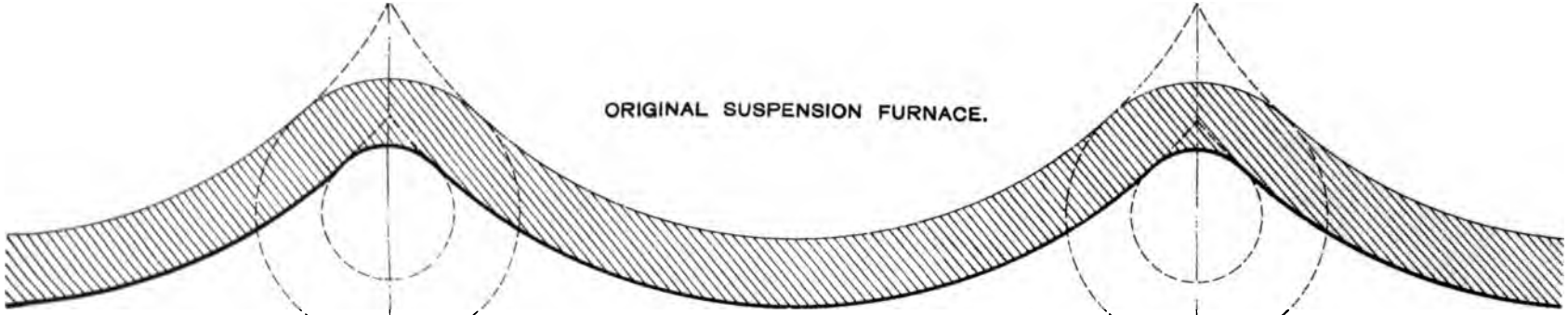

FIG. 1.

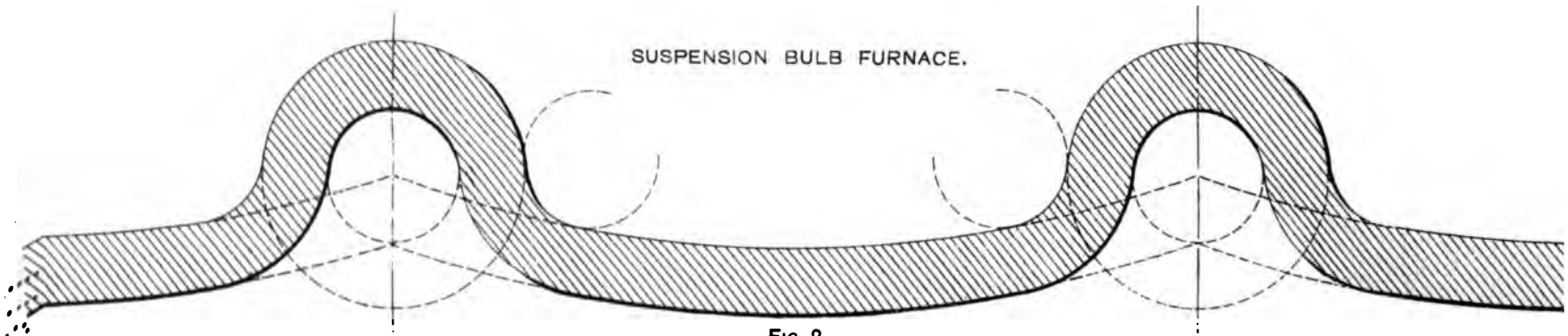

FIG. 2.

Proceedings N.E.C.I. of E. & S. 1904-1905
Session XXI

And.ᵗ Reid & Comp.ʸ L.ᵗᵈ Newcastle upon Tyne

To illustrate Mr. D. B. Morison's Paper on their ultimate strength.

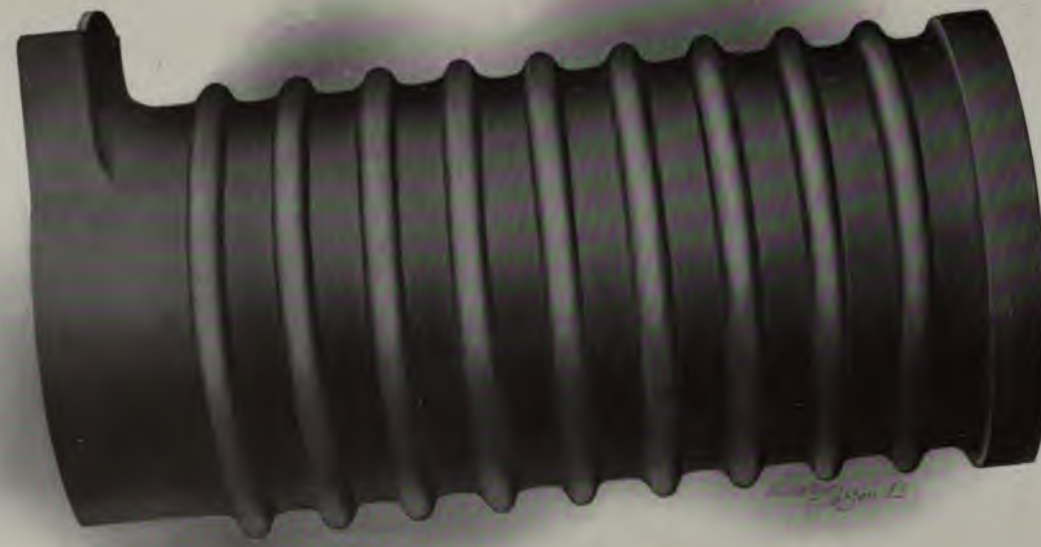

SUSPENSION BULB FURNACE.

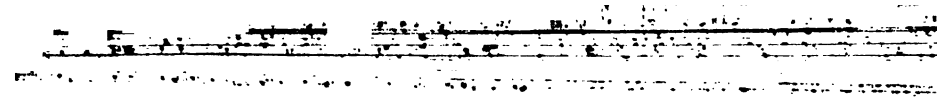

To illustrate Mr. D. B. [illegible] on their ultimate [illegible]

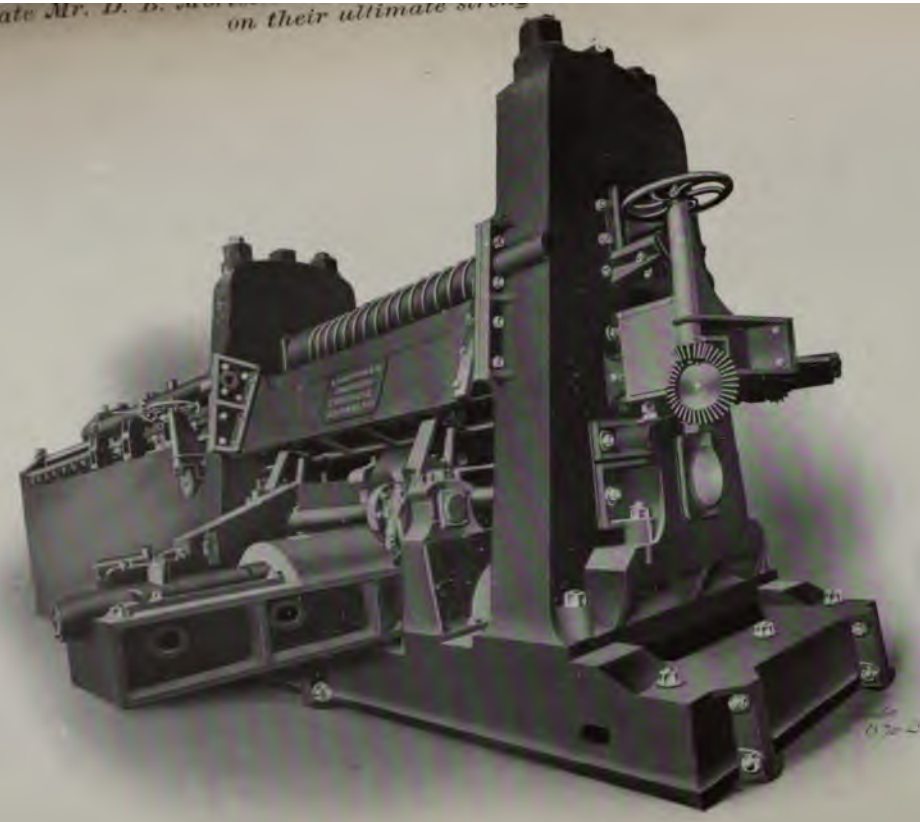

MULTIPLE STAGE CORRUGATING MILL.

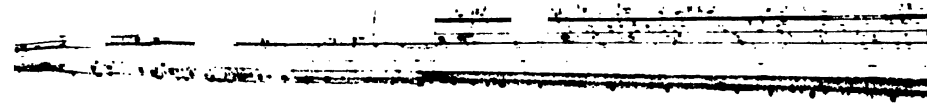

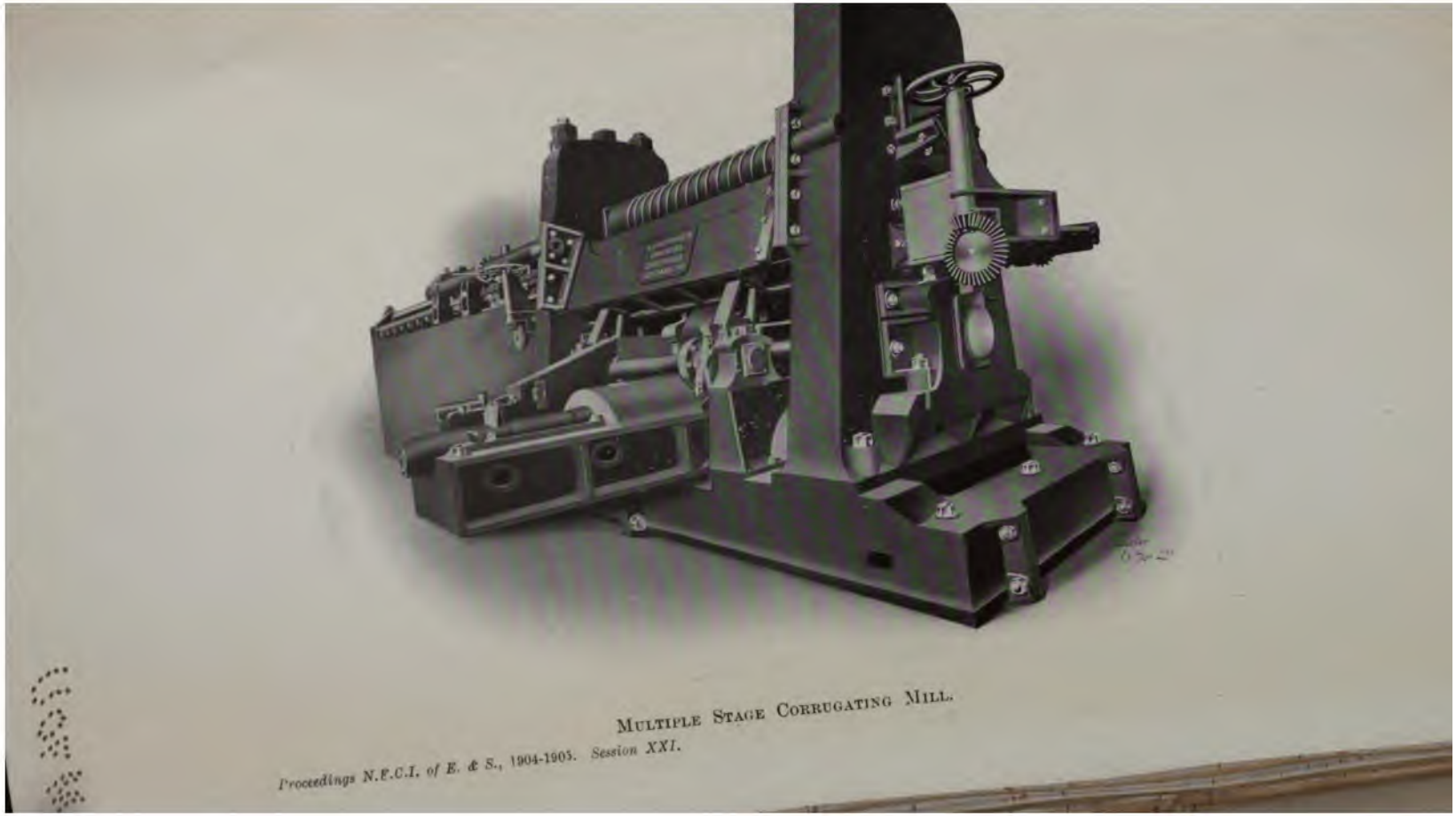

MULTIPLE STAGE CORRUGATING MILL.

Proceedings N.F.C.I. of E. & S., 1904-1905. Session XXI.

To illustrate Mr. D. B. Morison's Paper on "Boiler Furnaces and the effect of Oil on their ultimate strength."

FURNACE PLATE WITH THICKENED END.

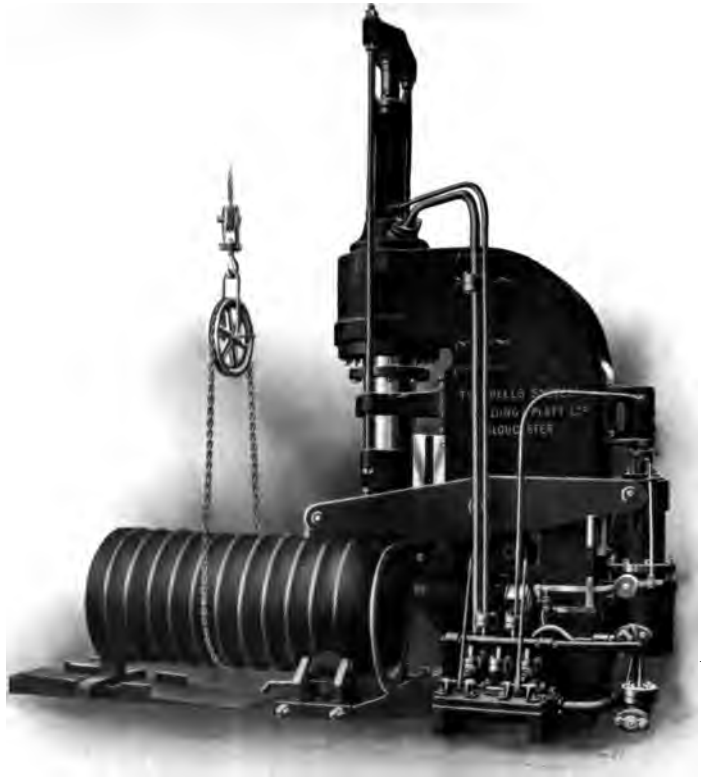

DIE PRESS FOR FLANGING FURNACE ENDS.

EXPERIMENTS ON STEEL, MADE BY THE UNITED STATES GOVERNMENT.

DIAGRAM OF TENSILE STRENGTH AT VARYING TEMPERATURES.

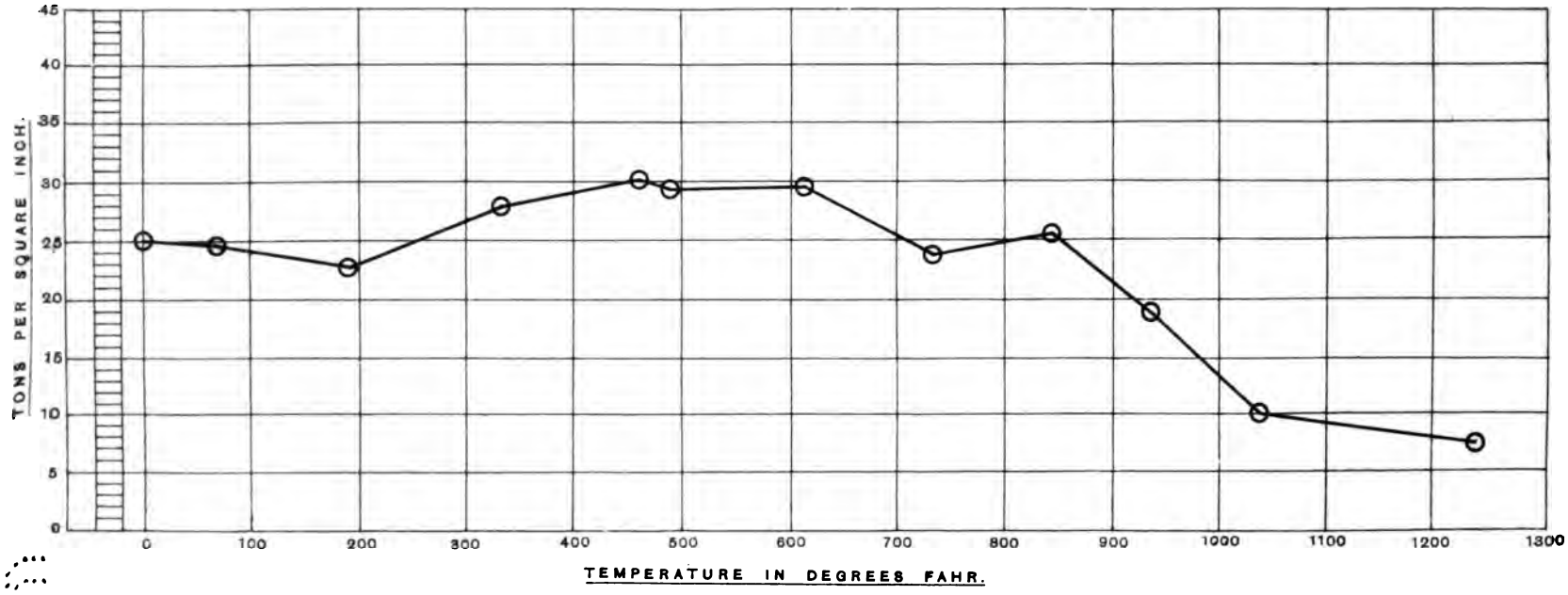

And.w Reid & Comp.y L.td Newcastle upon Tyne.

1

EXPERIMENTS ON STEEL, MADE BY THE UNITED STATES GOVERNMENT.

DIAGRAM OF TENSILE STRENGTH AT VARYING TEMPERATURES.

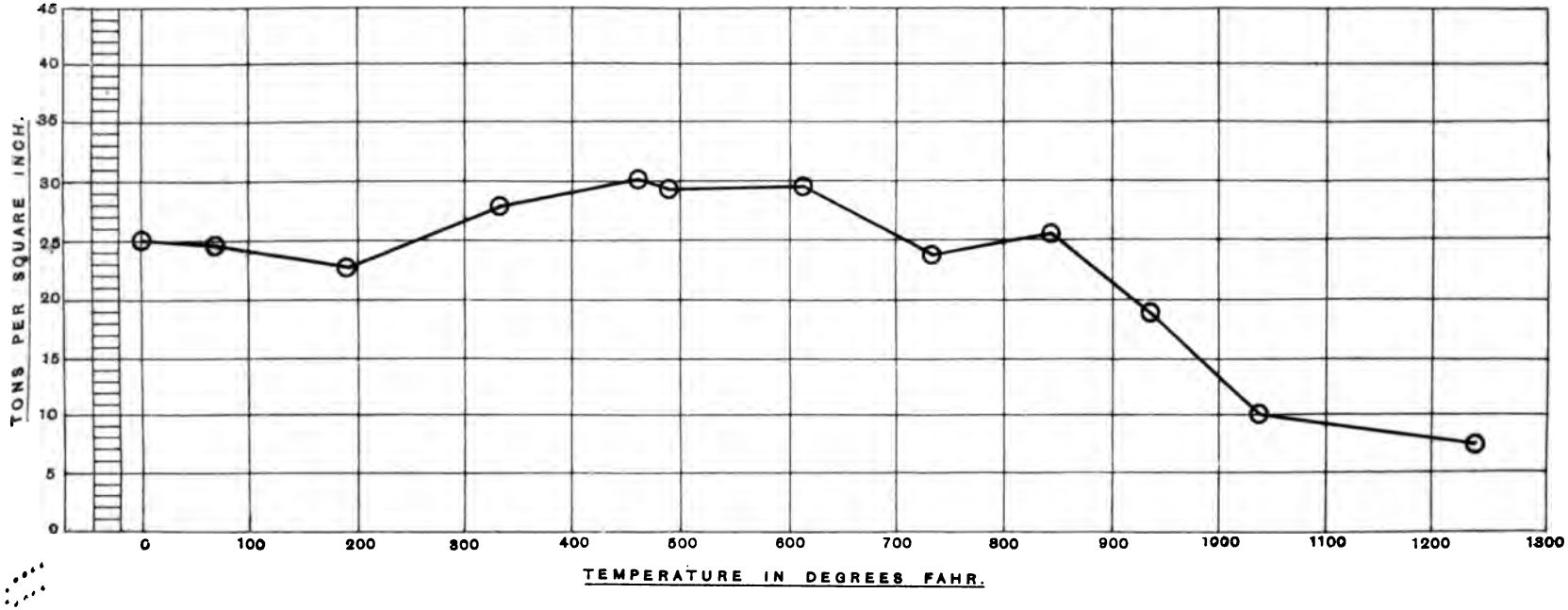

Proceedings N.E.C.I of E. & S. 1904-1905.
Session XXI

And.w Reid & Comp.y L.td Newcastle upon Tyne.

AAA. Exhaust Steam Pipes from Winches to Tank.
B. Exhaust Steam from Tank to Atmosphere.
C. Tank Overflow Pipe.
D. Feed Donkey Suction Pipe from Tank.
E. Feed Donkey Delivery to Boiler.

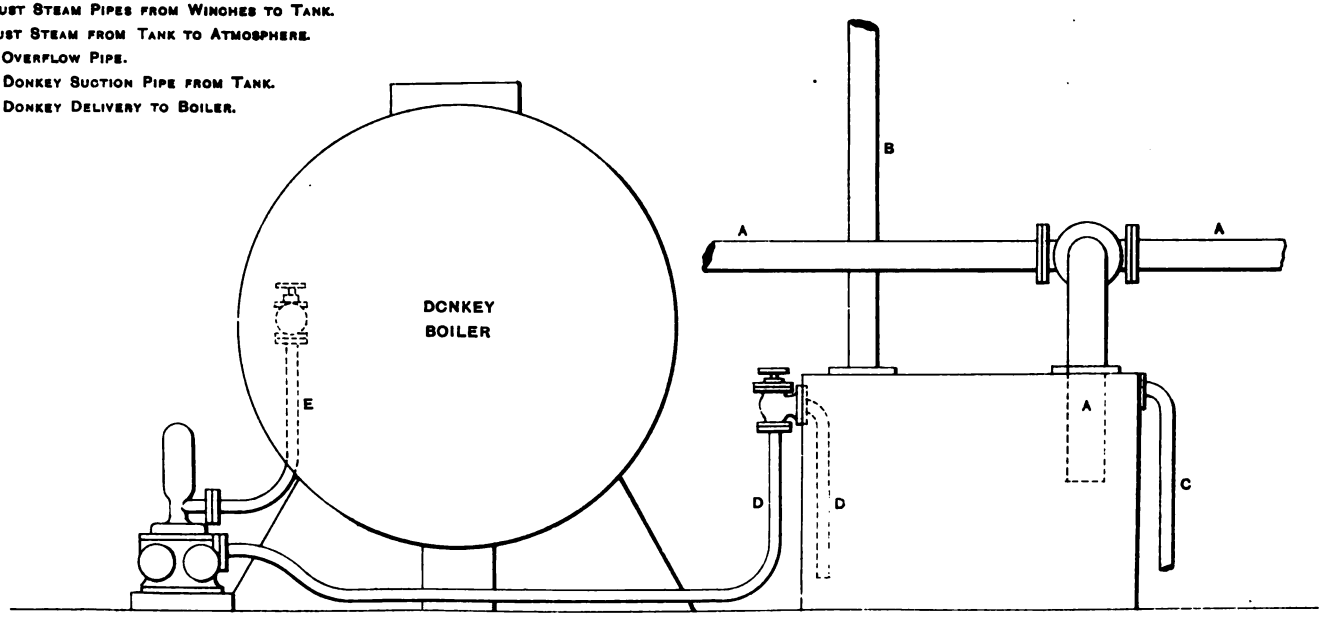

Ordinary Arrangement of Winch Exhaust Tank.

Proceedings N.E.C.I of E.& S. 1904-1905
Session XXI

And.w Reid & Comp.y L.td Newcastle upon Tyne

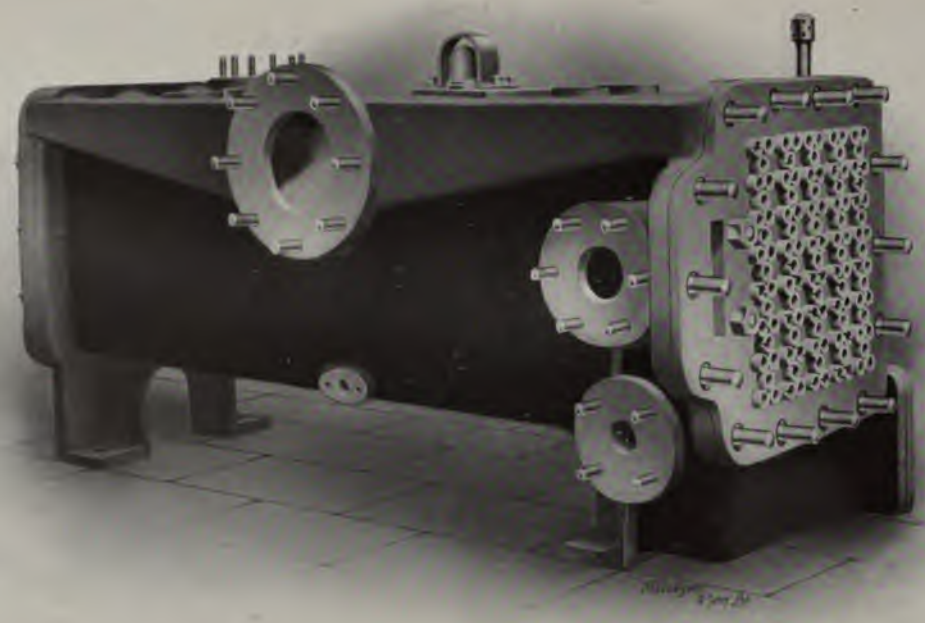

"CONTRAFLO" WINCH CONDENSER.

Proceedings N.E.C.I. of E. & S., 1904-1905. *Session XXI.*

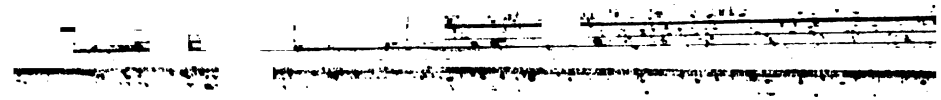

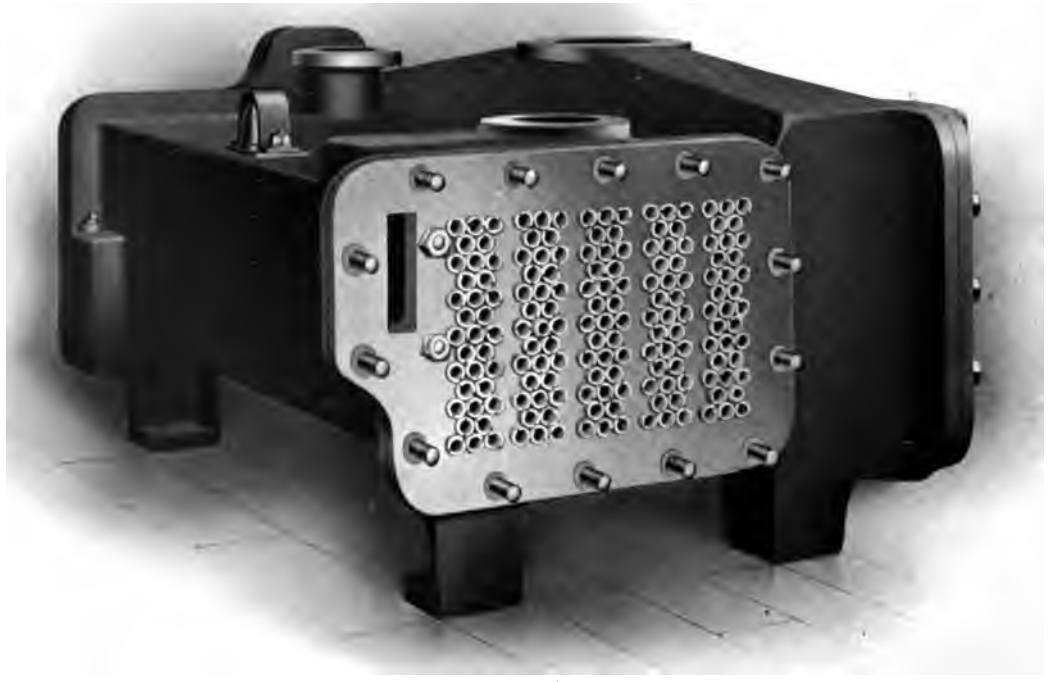

"CONTRAFLO" COMBINED OIL SEPARATOR AND WINCH CONDENSER.

"CONTRAFLO" COMBINED OIL SEPARATOR AND WINCH CONDENSER.

[illegible]

strate Mr. D. B. Morison's Paper on "Boiler Furnaces and the effect of Oil on their ultimate strength."

FIG. 1.

FIG. 2.—LIMIT RING.

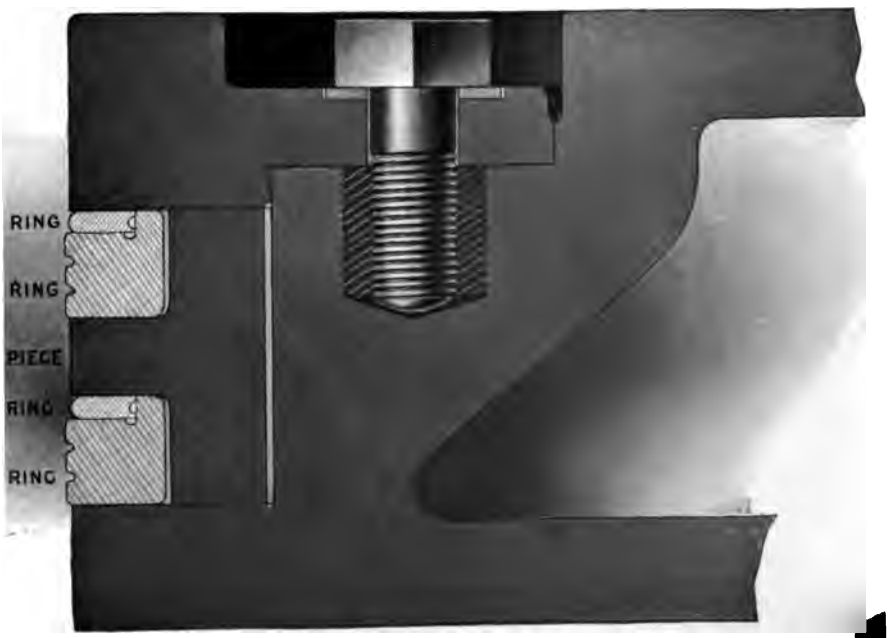

FIG. 3.—AS APPLIED TO RAMSBOTTOM PISTON RINGS.

To illustrate Mr. C. Geddes Remarks on Mr. D. B. Morison's Paper on "Boiler Furnaces" &c.

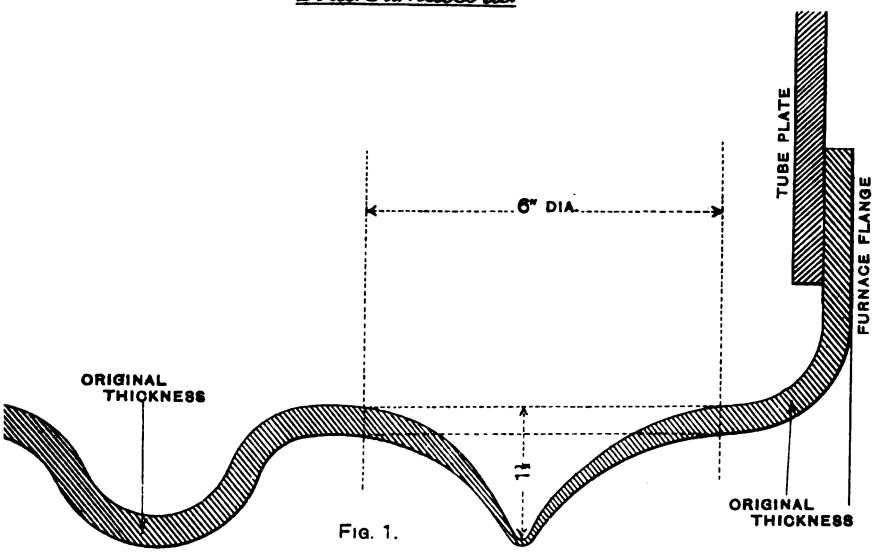

FIG. 1.

To illustrate Mr. D. B. Morison's Reply to the Discussion on his Paper on "Boiler Furnaces" etc.

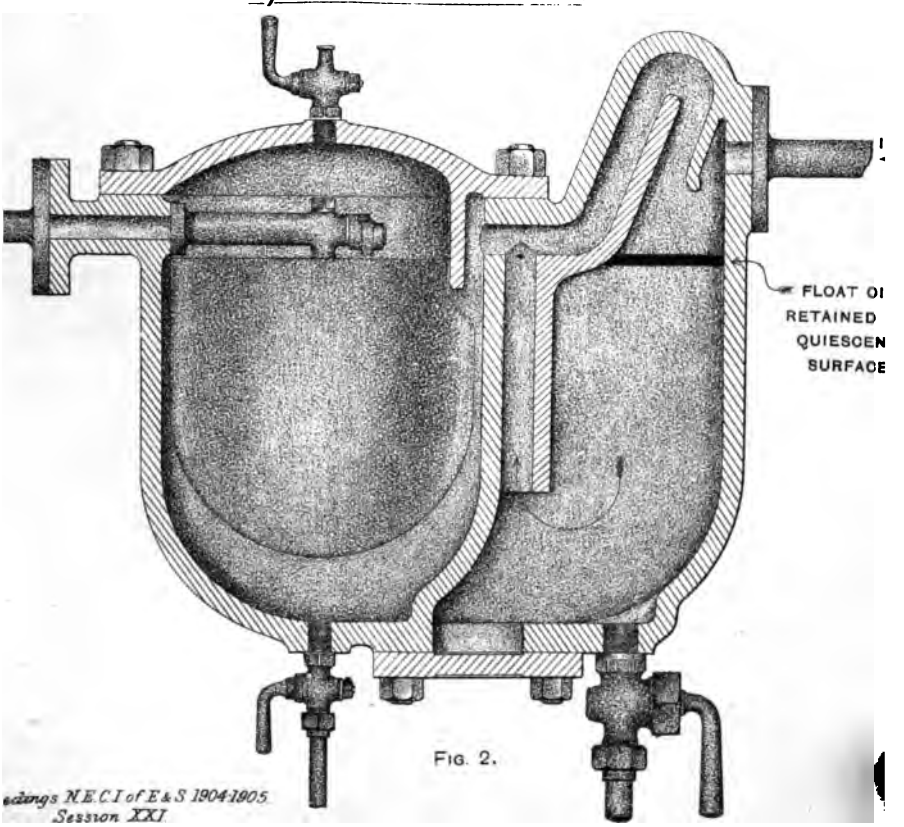

FIG. 2.
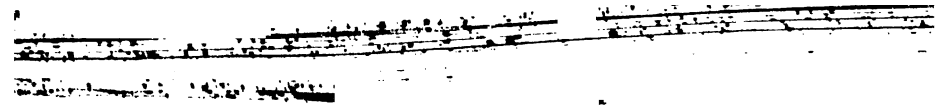
And.w Reid & Comp.y L.td. Newcastle upon Tyne.